PRODUCT DATASHEET

MYRRA P/N	Customer P/N	Designation
28358		**FLYBACK TRANSFORMER 18 V**

MECHANICAL CHARACTERISTICS - SCHEMATIC

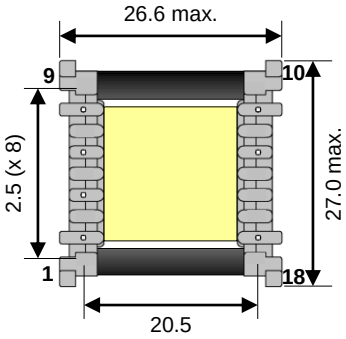

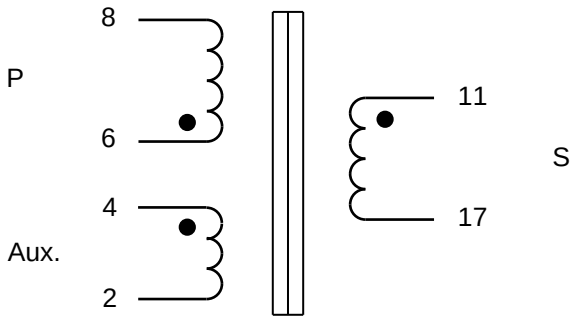

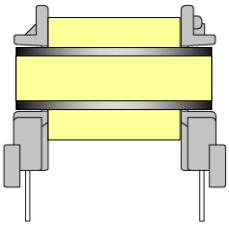

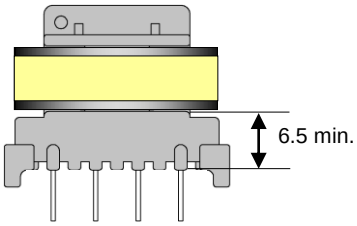

Max. height : 22.0 mm
Pins length : 4.0 +/- 0.5 mm
Weight : 24.4 g

Pins ☐ : 0.50 +/- 0.05 mm
Missing pins : 1, 3, 5, 7, 9, 10, 12, 14, 15, 16 and 18

ELECTRICAL CHARACTERISTICS

Tests	Windings / Terminals	Spec.	Conditions	Prod. test level
Inductance (mH)	P	1.0 +/- 10 %	0.1 V - 10 kHz	100 %
Turns ratio (+/- 0 turn)	P Aux. S	75 13 18	Ø 0.315 mm - UEW Ø 0.315 mm - UEW Ø 0.50 mm - TIW	100 %
Polarity	4, 6 and 11	In phase		100 %
Resistance (mΩ)	P Aux. S	847 max. 168 max. 103 max.	DC - 25°C	Samp.
Hi-pot (kV)	P / Aux. P + Aux. / Core P + Aux. / S S / Core	1.5 1.5 4.0 4.0	50 Hz	100 %

REMARKS

RoHS compliant

Class B transformer

P + Aux. / S
Reinforced insulation
6 mm min creepage distance

F. PESNEY		Apr., 24th 2015

TRASNFORMER DESCRIPTION

Type: Flyback transformer; open type

Manufacturer: MYRRA SA - 2 Bd de La Haye - Bussy ST Georges - 77600 - MARNE LA VALLEE - FRANCE

Model No: 28358

Ratings: 9W

Primary 1: 380 V

Secondary 1: 18 V

Other: Aux: 13 V

Core: ferrite, 25.4 mm by 25.4 mm by 7 mm stack.

Windings:

1. Magnet Wire: Copper

2. Primary Winding:

   (a) UEW wire, 0.315mm diameter, 75 turns

3. Secondary Winding:

   (a) TIW wire, 0.5mm diameter, 18 turns

4. Auxiliary Winding:

   (a) UEW wire, 0.315mm diameter, 13 turns

Insulation System: Class B (130°C)

1. Bobbin: T375J by CHANG CHUN PLASTICS CO LTD (E59481), UL94V-0; single type, 0.85mm min. thick, 150°C.

2. Isolation between Primary and Secondary

Layers	mm	Material and Temp Rating	Total mm
3	0.056	Polyester - 130 °C	0.168
1	-	Triple insulated wire (secondary winding) – TIW-B (E305883) or TILW-B (E225803) or DRTIW-B (E335841)	-

3. Outerwrap:

Layers	mm	Material and Temp Rating	Total mm
3	0.056	Polyester tape - 130 °C	0.168

4. Primary to Auxiliary:

Layers	mm	Material and Temp Rating	Total mm
2	0.056	Polyester - 130 °C	0.112

5. Crossovers

12.1 Primary over Secondary

Layers	mm	Material and Temp Rating	Total mm
1	-	Triple insulated wire (secondary winding) – TIW-B (E305883) or TILW-B (E225803) or DRTIW-B (E335841)	-

12.2 Secondary over Primary

Layers	mm	Material and Temp Rating	Total mm
1	-	Triple insulated wire (secondary winding) – TIW-B (E305883) or TILW-B (E225803) or DRTIW-B (E335841)	-

6. Primary Winding to Secondary Winding

Layers	mm	Material and Temp Rating	Total mm
3	0.056	Polyester - 130 °C	0.168
1	-	Triple insulated wire (secondary winding) – TIW-B (E305883) or TILW-B (E225803) or DRTIW-B (E335841)	-

7. Primary Winding to Core

7.1 Under Winding

Layers	mm	Material and Temp Rating	Total mm
1	1.4	Bobbin, T375J, 150°C	1.4

7.2 Side (Flange)

Layers	mm	Material and Temp Rating	Total mm
1	0.85	Bobbin, T375J, 150°C	0.85

8. Outerwrap

Layers	mm	Material and Temp Rating	Total mm
4	0.056	Polyester - 130 °C	0.224

9. Impregnation: one of the following varnishes used:

a) 1032HOK by QUALIPOLY CHEMICAL CORP.; E213437, 155°C

b) AC43 by JOHN C DOLPH CO; E317427, 155°C

c) E962 by ZHUHAI CHANGXIAN CHEMICAL TECHNOLOGY CO LTD, E335405, 130°C