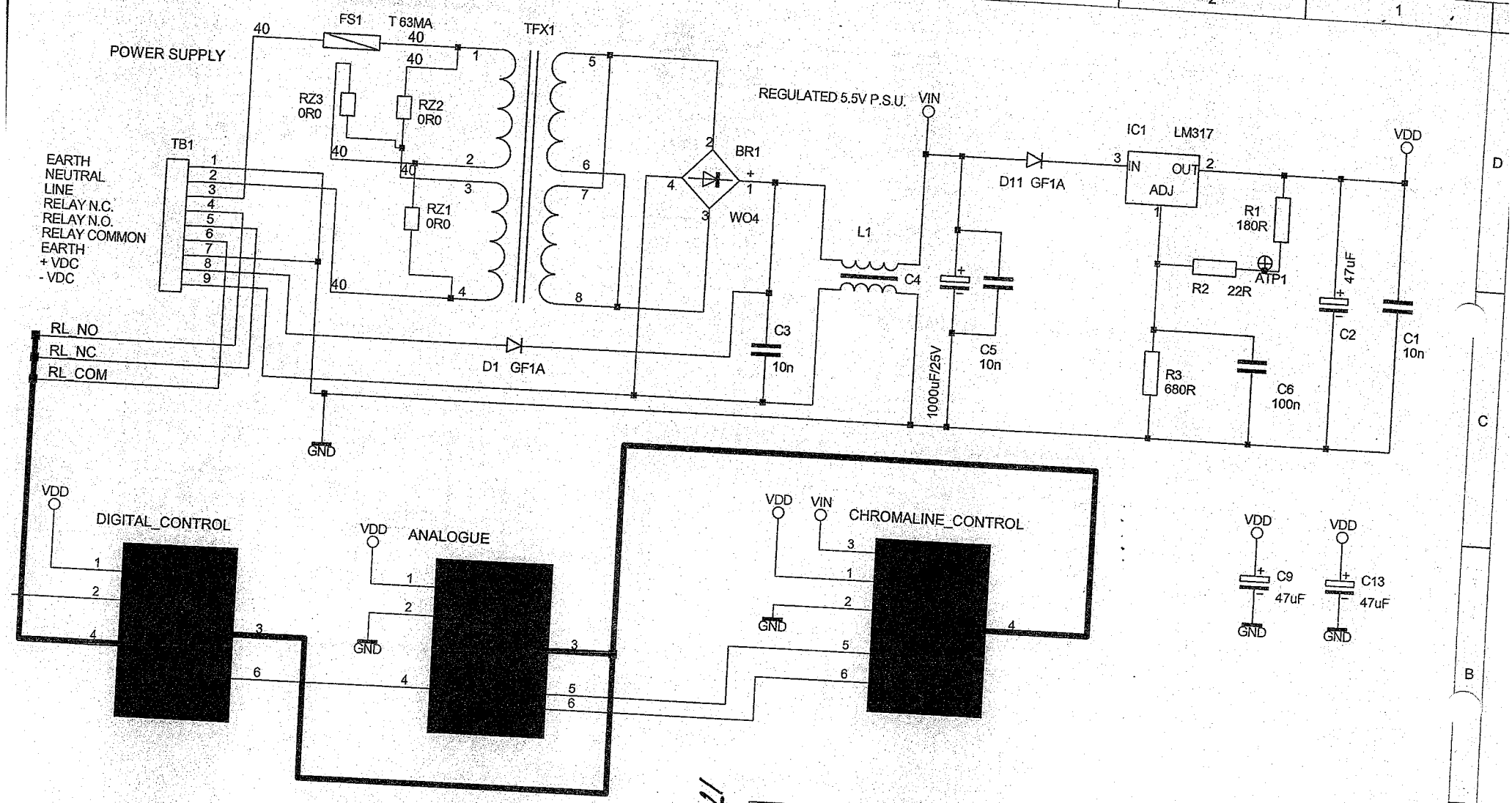

MEMCO LTD

A HALMA GROUP COMPANY

TITLE: WHALE CONTROLLER - BLOCK DIAGRAM		ISSUE	ECN NO.
DRAWING NO. -	1 1 -		
DRAWN BY: DAVE KELLY	CHKD. BY:		
DATE: 28/03/2003	CHKD. DATE:		

173023-1586962
811.3
Pg 1 of 4

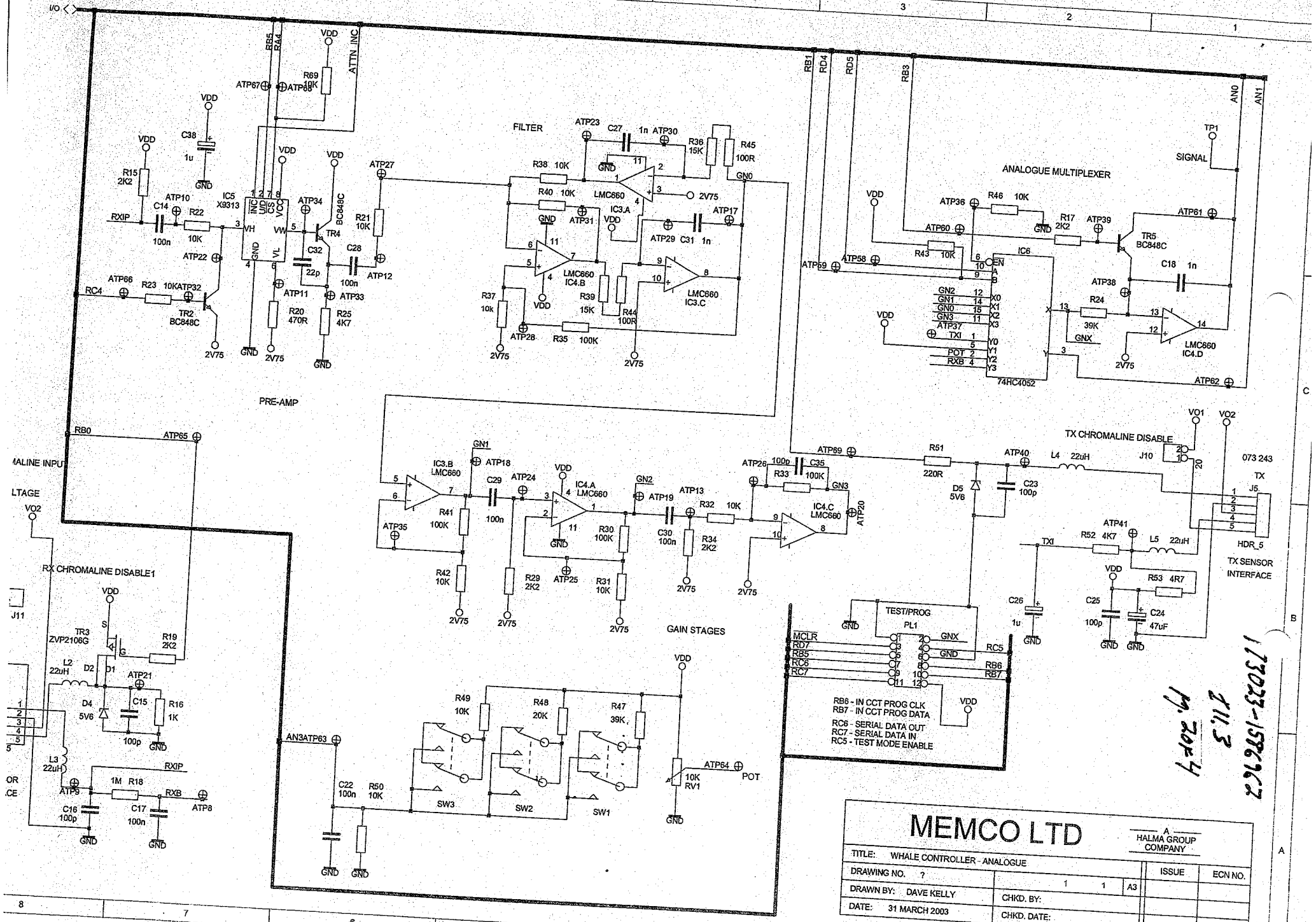
PRE-AMP
FILTER
ANALOGUE MULTIPLEXER
GAIN STAGES
TX CHROMALINE DISABLE
RX CHROMALINE DISABLE1
TX SENSOR INTERFACE
IC5 X9313
LMC660 IC3.A
LMC660 IC4.B
LMC660 IC3.C
LMC660 IC3.B
LMC660 IC4.A
LMC660 IC4.C
LMC660 IC4.D
IC6 74HC4052
TR2 BC848C
TR4 BC848C
TR5 BC848C
TR3 ZVP2106G
SW1
SW2
SW3
RV1
J10
J5
HDR_5
TEST/PROG
PL1
RB6 - IN CCT PROG CLK
RB7 - IN CCT PROG DATA
RC6 - SERIAL DATA OUT
RC7 - SERIAL DATA IN
RC5 - TEST MODE ENABLE
MEMCO LTD
A HALMA GROUP COMPANY
TITLE: WHALE CONTROLLER - ANALOGUE
DRAWING NO. ?
DRAWN BY: DAVE KELLY
DATE: 31 MARCH 2003
CHKD. BY:
CHKD. DATE:
ISSUE
ECN NO.
A3

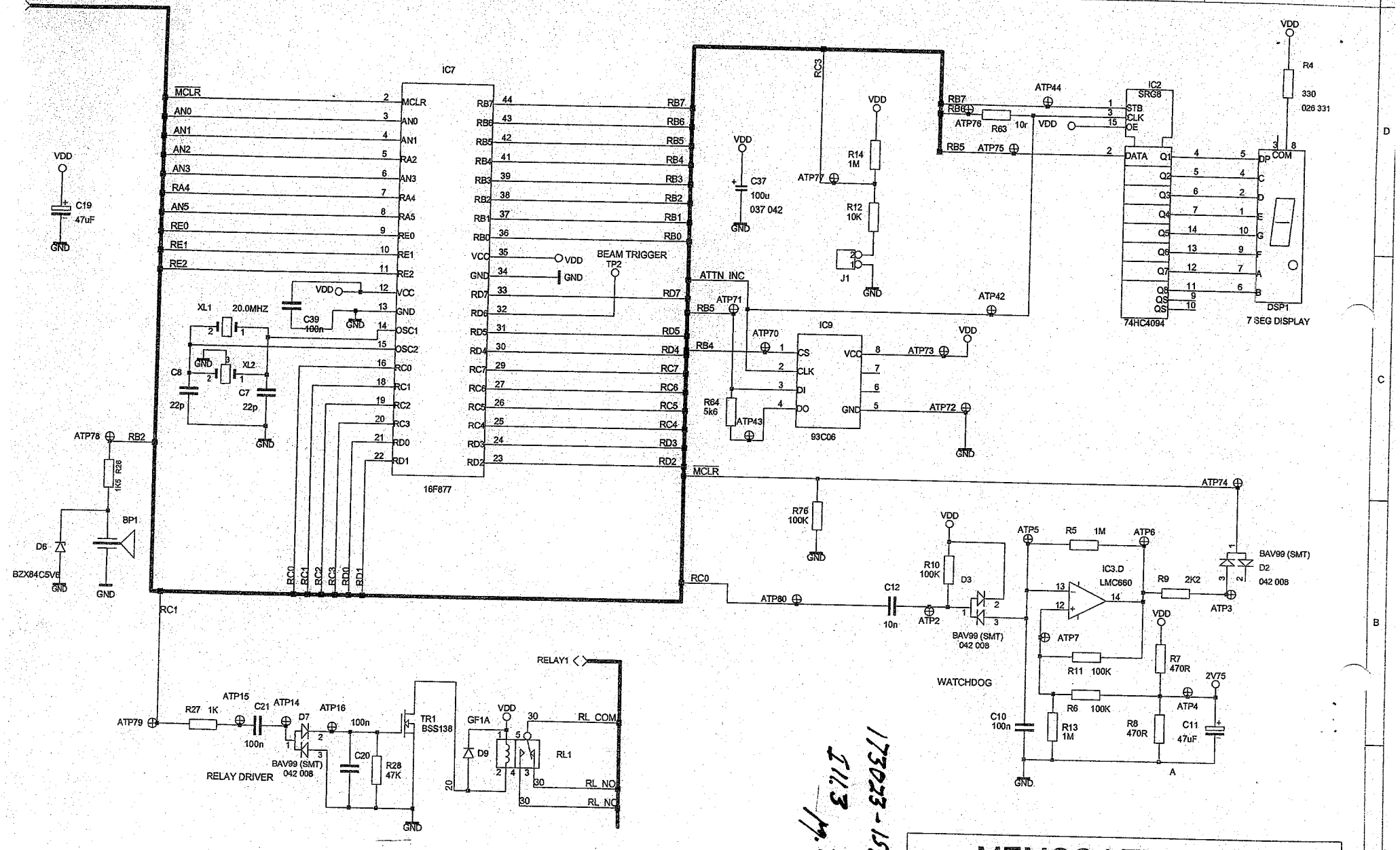

1/75023 - 1588962
Iss 3 Pg 3 of 4

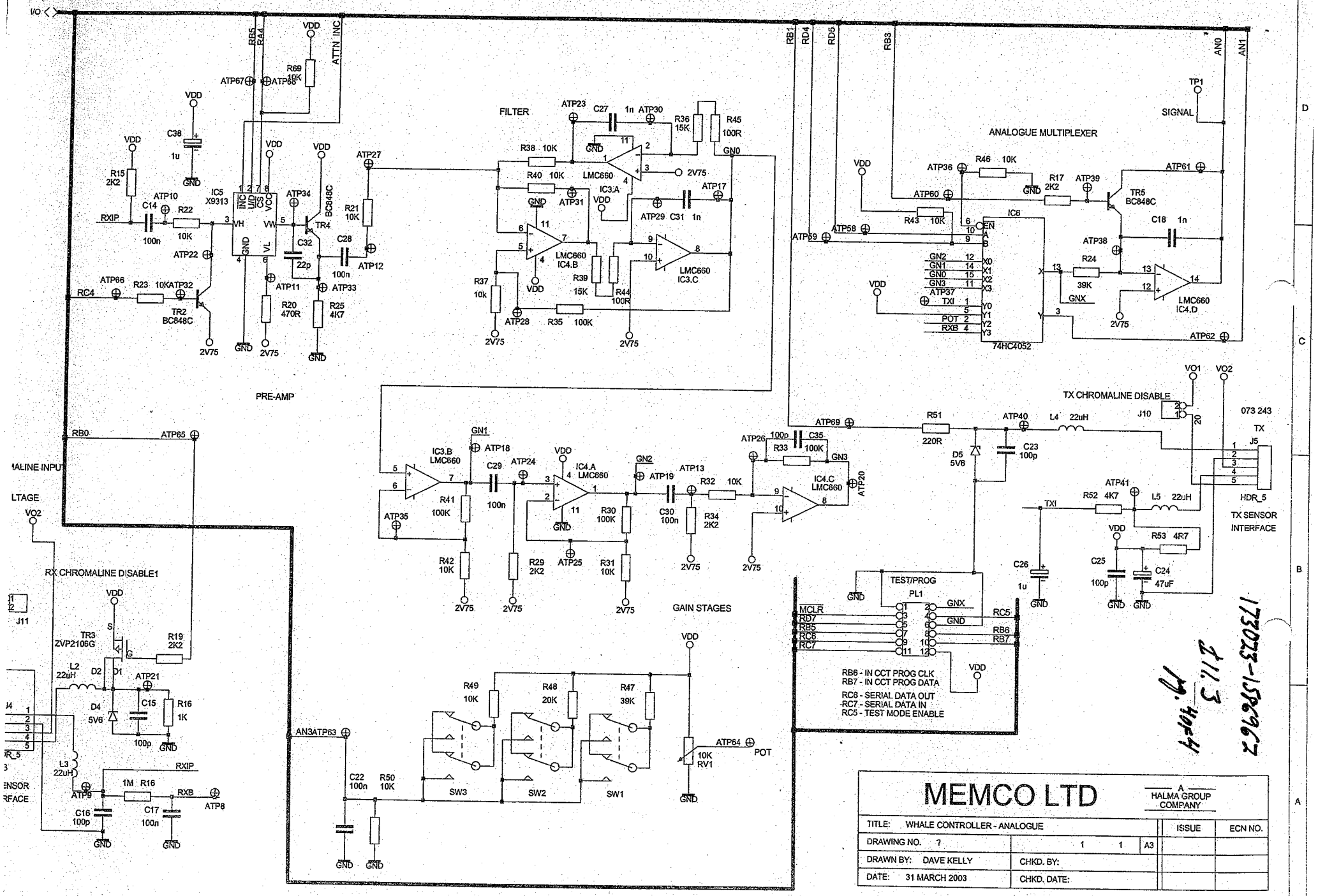

173023-1S8696Z
Fig. 3 of 4