DRG. No. 011 298 -A3

IF IN DOUBT ASK

DO NOT SCALE

THIRD ANGLE PROJECTION

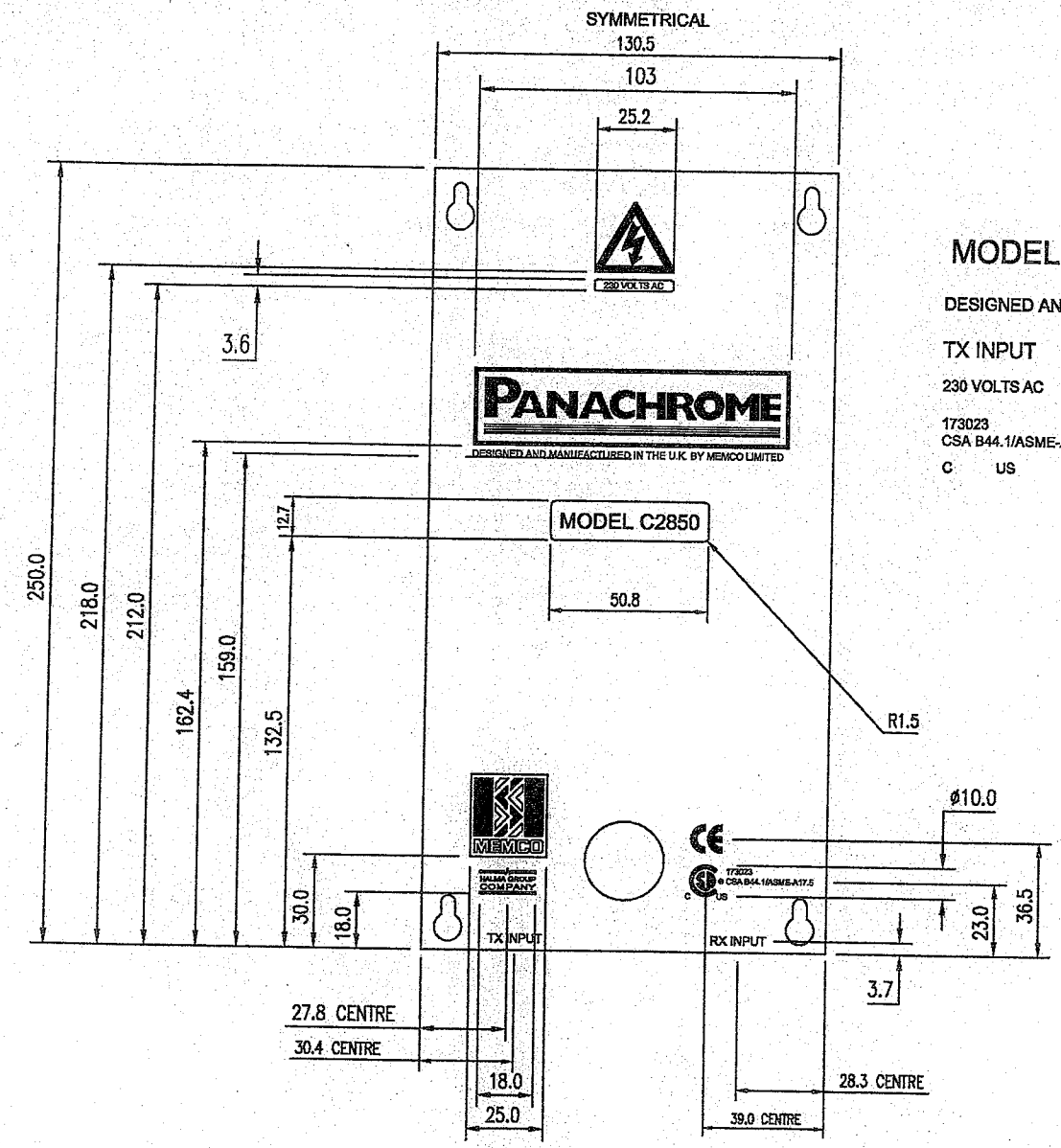

MODEL C2850 = Arial 4.8mm high (20pt)

DESIGNED AND MANUFACTURED = Arial 2.3mm high (10pt)

TX INPUT = Arial 2.8mm high (12pt)

230 VOLTS AC = Arial 2.0mm high (9pt)

173023 = Arial 1.9mm high (8pt)

CSA B44.1/ASME-A17.5 = Arial 1.9mm high (8pt)

C US = Arial 1.9mm high (8pt)

173023-1586962
ATL1
pg. 1 of 4

E	A	SCREW THREADS UNLESS OTHERWISE STATED ALL SCREW THREADS ARE TO BE ISO METRIC COARSE SERIES MEDIUM FIT (6H6g – B.S.3643)	THIS DOCUMENT IS ISSUED SOLELY ON THE UNDERSTANDING THAT IT IS COPYRIGHT AND REGARDED AS CONFIDENTIAL, IT MUST NOT BE USED OR REPRODUCED WITHOUT THE PRIOR WRITTERN CONSENT OF MEMCO LIMITED	DRAWN TO B.S. 308 REMOVE ALL BURRS ALL DIMENSIONS IN MILLIMETERS TOLERANCES UNLESS OTHERWISE STATED ONE DEC PLACE ± 0.5 TWO DEC PLACE ± 0.1 ANGULAR ± 0° 30'	MATERIAL 011 158 FINISH	DRAWN BY S.W DATE 22/04/04 CHKD BY DATE	MEMCO LTD ORIGINAL SCALE N.T.S. TITLE SCREENED COVER–MODEL C2850 PANACHROME CONTROLLER	HALMA GROUP COMPANY SHEET 1 OF 1 SHEETS DRG. No. 011 298
	22.04.04						
No.							
ON							

DRG. No. 004 321 -A3

IF IN DOUBT ASK

DO NOT SCALE

THIRD ANGLE PROJECTION

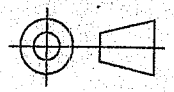

124.0

187.0

Closing Opening	DC INPUT			DOOR OPERATOR			AC SUPPLY IN		
	-	+	G	COM	N/O	N/C	L	N	G
For external signalling only Apply 12V to 230V AC or DC	18 TO 25V 10VA MAX NEGATIVE EARTH			250V ~ 24V ⎓		5A MAX	~ 230V 115V FUSE	± 15% 60mA 115mA T 250mA	

J8 J7 J9

J1 J6 J2

ON TONE OFF

ON TIME-OUT OFF

NORMAL MODE TEST

JUMPER FUNCTIONS		
JUMPER	JUMPER FITTED	JUMPER REMOVED
J1	Special Firmware Version. DO NOT FIT	DO NOT FIT
J2	Disable Visual LED Indication	Enable Visual LED Indication
J6	External Signal Visual LED Activation	Automatic Visual LED Activation
J7	Doors opening external signalling -Signal Rises	Doors opening external signalling -Signal Falls
J8	Doors closing external signalling -Signal Rises	Doors closing external signalling -Signal Falls
J9	Reserved. DO NOT FIT	Reserved. DO NOT FIT
J10	Enable visual LED Indication in TX	Disable visual LED Indication in TX
J11	Enable visual LED Indication in RX	Disable visual LED Indication in RX

Note: If jumper is to be removed, fit to one pin only in case it is required in the future

LED DISPLAY

TX DETECTOR INPUT J5

J10 J11

40 55 25 70 10

TIME-OUT - SEC

RX DETECTOR INPUT J4

SEE TROUBLESHOOTING GUIDE FOR FURTHER INFORMATION

CHARACTERS :- WHITE (ARIAL)

BACKGROUND :- BLACK

MATERIAL :- 0.1mm VINYL WITH FASSON PERMANENT ADHESIVE BACKING OR EQUIVALENT

THIS DRAWING IS NOT TO BE USED AS AN ARTWORK

I/2023-1526967
I.1.1
4 Nov 2014

E	A	SCREW THREADS	THIS DOCUMENT IS ISSUED SOLELY ON THE UNDERSTANDING THAT IT IS COPYRIGHT AND REGARDED AS CONFIDENTIAL, IT MUST NOT BE USED OR REPRODUCED WITHOUT THE PRIOR WRITTEN CONSENT OF MEMCO LIMITED	DRAWN TO B.S. 308	MATERIAL SEE ABOVE	DRAWN BY S.W	MEMCO LTD — HALMA GROUP COMPANY
E	19.05.04	UNLESS OTHERWISE STATED ALL SCREW THREADS ARE TO BE ISO METRIC COARSE SERIES MEDIUM FIT (6H6g – B.S.3643)		REMOVE ALL BURRS		DATE 19.05.2004	ORIGINAL SCALE 1 : 1 — SHEET 1 OF 1 SHEETS
No.				ALL DIMENSIONS IN MILLIMETRES	FINISH	CHKD BY	TITLE INNER LABEL – MODEL C2850 PANACHROME
ON				TOLERANCES UNLESS OTHERWISE STATED ONE DEC PLACE ± 0.5 TWO DEC PLACE ± 0.1 ANGULAR ± 0° 30'		DATE	DRG. No. 004 321

DRG. No. 003 531 -A4

IF IN DOUBT ASK

DO NOT SCALE

THIRD ANGLE PROJECTION

ISSUE	ECN No.
A	———

DRAWN TO B.S. 308

REMOVE ALL BURRS

ALL DIMENSIONS IN MILLIMETRES

TOLERANCES UNLESS OTHERWISE STATED
ONE DEC PLACE ±
TWO DEC PLACE ±
ANGULAR ± 0° 30'

SCREW THREADS

UNLESS OTHERWISE STATED ALL SCREW THREADS ARE TO BE ISO METRIC COARSE SERIES MEDIUM FIT (6H6g – B.S.3643)

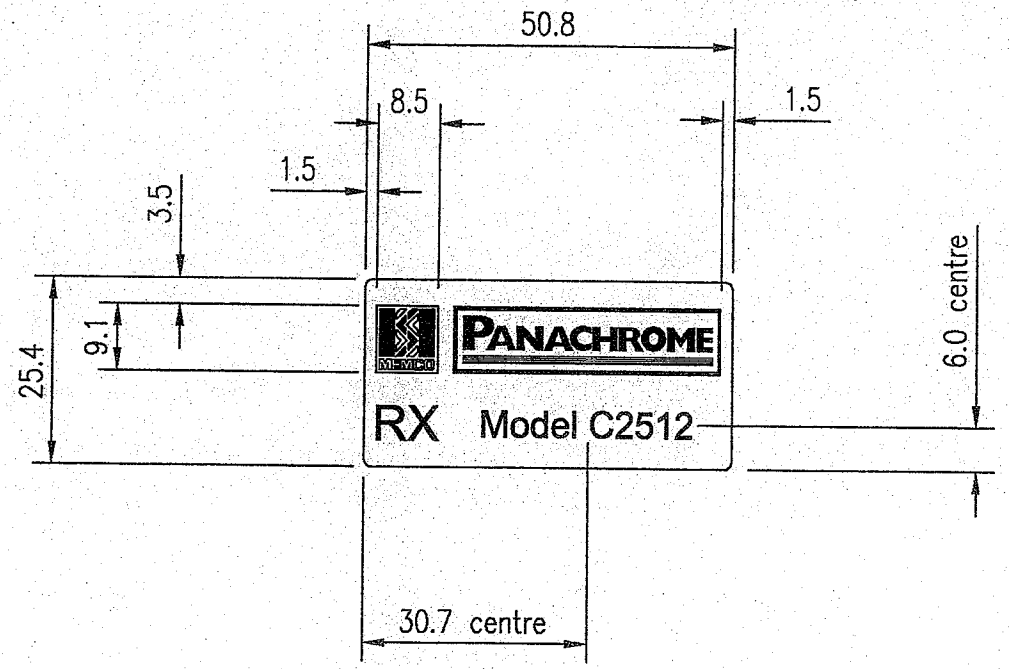

WHITE CHARACTER ON BLACK BACKGROUND
RX = Arial 4.8mm High (20Pt.)
Model 2512= Arial 3.6mm High (15Pt.)
Memco & Panachrome Logo 9.1mm High

CSA LOGO TO BE ADDED

Fill in 3 of 4

173023-1586962

THIS DOCUMENT IS ISSUED SOLELY ON THE UNDERSTANDING THAT IT IS COPYRIGHT AND REGARDED AS CONFIDENTIAL, IT MUST NOT BE USED OR REPRODUCED WITHOUT THE PRIOR WRITTEN CONSENT OF MEMCO LIMITED

MATERIAL BL 0021	DRAWN BY SW	MEMCO LTD	A HALMA GROUP COMPANY
	DATE 30.04.2004		
FINISH	CHKD BY	ORIGINAL SCALE 1 : 1	SHEET 1 OF 1 SHEETS
	DATE	TITLE Antenna Label Panachrome RX	DRG. No. 003 531

DRG. No. 003 530 -A4

IF IN DOUBT ASK

DO NOT SCALE

THIRD ANGLE PROJECTION

ISSUE	ECN No.
A	———
B	21.07.04

DRAWN TO B.S. 308

REMOVE ALL BURRS

ALL DIMENSIONS IN MILLIMETRES

TOLERANCES UNLESS OTHERWISE STATED
ONE DEC PLACE ±
TWO DEC PLACE ±
ANGULAR ± 0° 30'

SCREW THREADS

UNLESS OTHERWISE STATED ALL SCREW THREADS ARE TO BE ISO METRIC COARSE SERIES MEDIUM FIT (6H6g – B.S.3643)

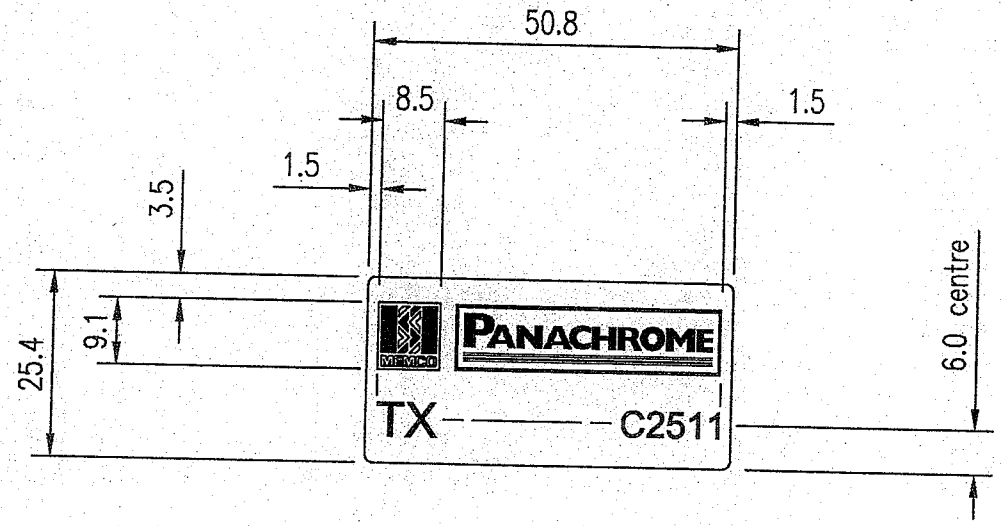

WHITE CHARACTER ON BLACK BACKGROUND
TX = Arial WESTERN REGULAR(20Pt.) FONT SCALE :-
2511= Arial WESTERN REGULAR(15Pt.) FONT SCALE:-
Memco & Panachrome Logo 9.1mm High

CSA LOGO TO BE ADDED

Issue 1 4 of 4

173423-159696

THIS DOCUMENT IS ISSUED SOLELY ON THE UNDERSTANDING THAT IT IS COPYRIGHT AND REGARDED AS CONFIDENTIAL, IT MUST NOT BE USED OR REPRODUCED WITHOUT THE PRIOR WRITTEN CONSENT OF MEMCO LIMITED

MATERIAL	DRAWN BY	MEMCO LTD	HALMA GROUP COMPANY
BL 0021	SW		
	DATE 30.04.2004		
FINISH	CHKD BY	ORIGINAL SCALE 1 : 1	SHEET 1 OF 1 SHEETS
	DATE	TITLE Antenna Label Panachrome TX	DRG. No. 003 530