MEMCO

PRODUCT INFORMATION SHEET

PANACHROME

173023 – 1586962
Sh. 5 pg. 1 of 4

Panachrome is the revolutionary new lift safety detection system offering maximum passenger protection. The traditional infra-red light curtain is coupled with coloured indicators that operate on door movement. The detectors will illuminate green if the doors are opening, flash red as they start to close, and stay red as the doors move together.

The combined system is an effective solution for sites where extra caution is required on lift entry, for example; rest homes, hospitals, nurseries and public access buildings.

- ✓ Complies with EN81-70 legislation - Disability Discrimination Act
- ✓ Coverage exceeds minimum requirements of 25mm to 1800mm
- ✓ Coloured red/green indication to highlight door movement
- ✓ Infra-red detection delivered as 154 beam light curtain
- ✓ 4m pluggable cable
- ✓ 6m range
- ✓ 10mm profile
- ✓ Detectors rated to IP65
- ✓ Simplified installation
- ✓ Can be used on centre-opening and side-opening doors

1. VISUAL INDICATORS

The fixed light blocks are evenly spread throughout the detector edge to display green on opening, and flash red when the doors are starting to close. This changes to solid red as the doors move together, and the lights are switched off after door closure.

The lights can be switched off on one side if required, to accommodate a side-opening door.

2. INFRA-RED CURTAIN

A curtain of 154 beams operates between the car doors to prevent passengers becoming trapped between the closing doors.

Features:-

i) **Auto-Compensating Gain Control**
No adjustments required when installing, simply 'plug and play'

(ii) **Power Reduction Function**
This patented software feature prolongs the life-span of the detectors by automatically putting them into stand-by mode when the lift is not in use

(iii) **Diagnostic Display**
7 segment LED display showing controller status or fault code

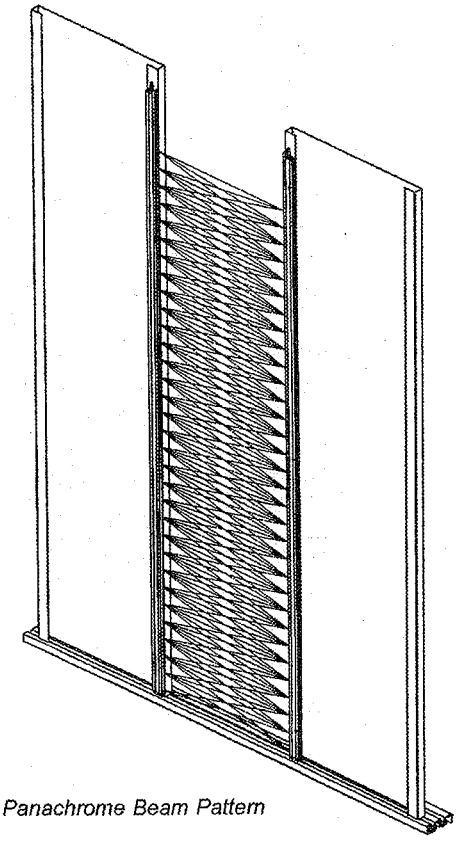

Fig A: 10mm Panachrome Beam Pattern

P achrome Detectors

The detectors are 10mm wide which allows them to be fitted to virtually all lifts. They are simply mounted using countersunk headed self-tapping screws. See Fig C.

Fig C

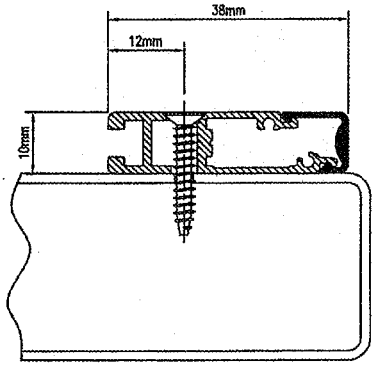

173023-1586962
I 11.5
pg. 2 of 4

There is a fixing clamp plate available for installations where there is insufficient reach for standard fixing method. See Fig D.

Fig D

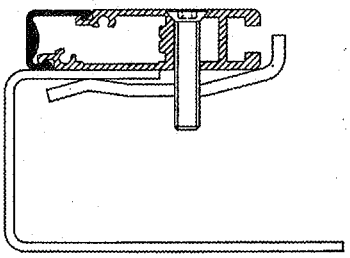

Installation Features:

- ✓ Dynamic fixing of the antennas
- ✓ Can be used on side-opening and centre-opening doors
- ✓ Mixed fixing possible (visible light can be suppressed on either antenna)
- ✓ Screws for standard fixing or optional clamps
- ✓ Separate, pluggable cable tested at >50 million cycles
- ✓ Controller on the top of the car
- ✓ Pluggable connectors for easy wiring

Each antenna is wired to the control box through a 4m extension cable equipped with plugs at each end. That allows an easy connection and minimises miswiring problems.

The standard control box can be supplied both with 230V AC and 18-25V DC.
Other models are available for 115V AC and 18-25V DC.

Visual Indicator Switching:
There are 2 different ways to switch the red light on closure and green light on opening.

1) **automatic software switching:** In this mode, the software integrated in the Panachrome controller can detect the door movement and changes the light colour. This solution requires no extra connections.

2) **external signals:** In this mode, two signals (door opening and doors closing) from the lift controller or door operator change the light colour. This solution gives an optimum result especially on high-speed doors. Any available voltage 12V-230V AC or DC can be used.

Adjustments:
The following adjustments can be easily made, on site, to adapt the operation of the Panachrome light to different lift configurations.

1) Visible indicator switching mode:- auto-switching or external signals
2) Permanent visible light disabling on either antenna

(iv) **Timeout Function**

This software feature allows up to 5 non-adjacent light-curtain diodes to be ignored if they are permanently obstructed. It is automatically activated after an adjustable delay if a beam is permanently blocked. This is a useful service feature which enables detectors defaced by vandalism to continue working while arrangements are made to replace them.

(v) **Buzzer**

A buzzer can be activated/deactivated through a switch in the controller to sound on detection.

3. INSTALLATION

The Panachrome system comprises one pair of detectors (one each of Transmitter and Receiver), a controller and 2 connecting cables.

Mount the detectors as shown in Fig B. The detectors must be mounted with the Transmitter on the left hand, and the Receiver on the right hand door when viewed from the landing.

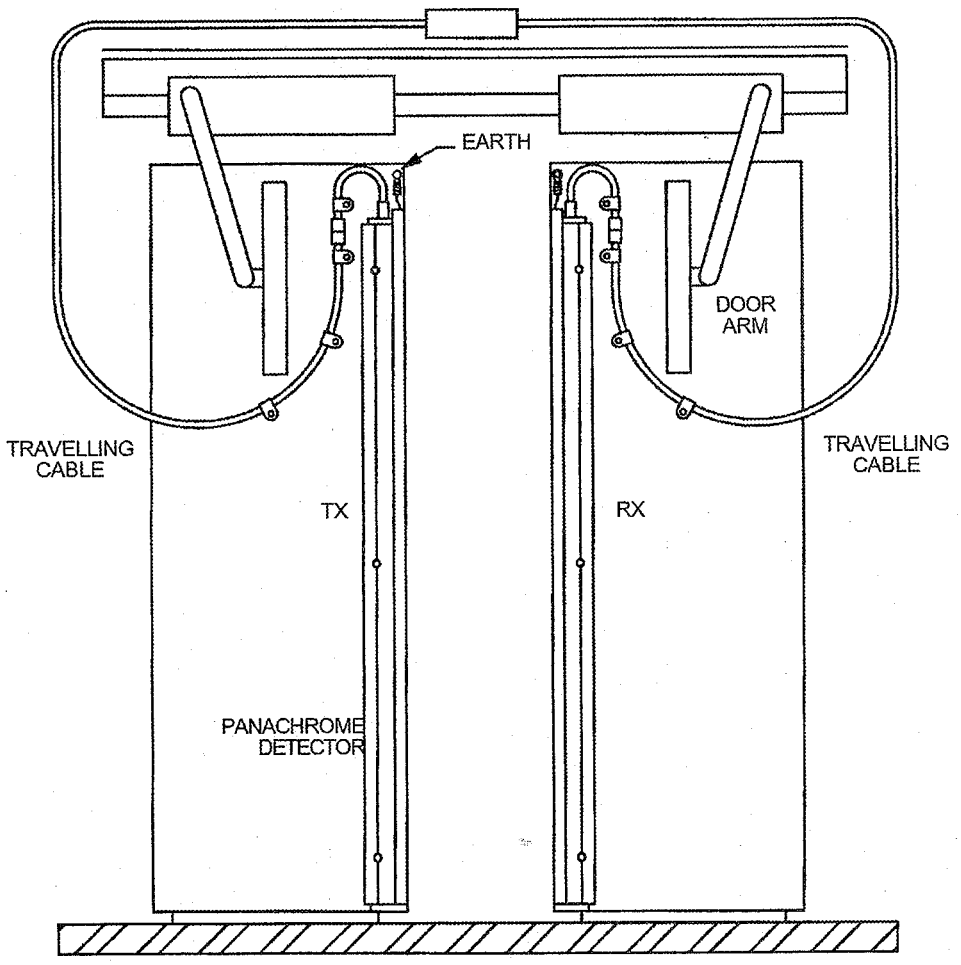

Fig B: Detector Installation

173023-1586962
2125
p 3 of 4

TECHNICAL SPECIFICATIONS

Size	
Panachrome C2510 Detectors	10mm x 38mm x 2000mm
Panachrome C2850 Controller	250mm x 205mm x 59mm
Extension Cables (2 per set)	4m
Packed Weights	
Panachrome C2510 Detectors	3.30kg
Panachrome C2850 Controller inc. Extension Cables (2 per set)	2.52kg
Fixing Kit Panachrome C2510	1 kit including: 055 217 - 6 off No.6 x 20mm CSK POZI; 055 223 - 12 off No.8 x 12mm S/T Pan POZI; 057 029 - 2 off Washer M4; 001 903 - 10 off P-Clip 4.6mm Ø
Detector Specifications	
Diode spacing	58.5mm
Distance between bottom beam and bottom of housing	22mm
Distance between top beam and bottom of housing	1835mm
Range	6.0m
No. of diodes per detector	32
No. of infra-red beams per detector	Standard 154
Maximum voltage in detector	15V DC
Maximum power consumption TX or RX	1.5W each when visual indication turned on
Light Immunity	100,000 lux
Operating temperature range	-10°C to +65°C as per BS2011 Pt.2.1 Ab and BS2011 Pt.2.2 Bb
EMC compliance to	Emissions to EN 12015:1998; Immunity to EN12016:1998
Ingress Rating	IP65
Controller Specifications	
Voltage requirements	195-265V AC or 93-127V AC, 50-60Hz depending on Model ordered - see below. 18-25V DC alternate source
Power consumption	8VA maximum with detectors fitted, visual indication on
Door operator relay	240V AC, ~~10A~~ 5A
Case Material	Epoxy Painted Steel
Trigger Duration	250mS typical
Timeout	Switched ON/OFF 10-70 seconds adjustable
Visual Indication trigger input voltage range	12V to 230V, AC or DC. Jumper selectable for rising or falling edge of signal

1T3023-1586962
211.5
p. 4 of 4

Ordering Information	
C2510	Set of TX, RX Detectors and Fixing Kit
C2511	Transmitter Detector (TX)
C2512	Receiver Detector (RX)
C2850	Panachrome Controller
C2850 001	230V Version
C2850 002	115V Version

A HALMA GROUP COMPANY

MEMCO

MEMCO LTD. MEMCO HOUSE
WALDECK ROAD, MAIDENHEAD
BERKS SL6 8BZ UK
TELEPHONE: +44 1628 770734
FACSIMILE: +44 1628 621947
www.memco.co.uk

As a result of our policy of continual improvement, the information in this document is subject to change without notice and it is intended only as general guidance on product performance and suitability; this information shall not form part of any contract.

DS/FEET/DS/PA/07.05.2004