SINAINCS TRANSFORMER DATA

CUSTOMER: DMT Ltd.
PART NO : Transformer (Memco C2851)
QUANTITY :

MODEL NO :
ITEM : EE 25/13 TRANSFORMER
DATE : 12/22/2006

SPECIFICATION:

1 ELECTRICAL CIRCUIT DIAGRAM:

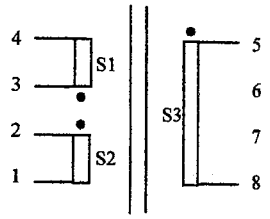

Master Contract: 173023
Report: 1586962
Project: 1892444
Illustration: 11/ 1 of 4

● Indicates start of winding

2 WINDING DETAILS:

SNO	TERMINAL		WIRE DIAMETER (mm/ SWG)	TURNS	REMARKS
	S	F			
1	3	4	0.315/ 30	75	Primary
2	2	1	0.315/ 30	13	Auxiliary
3	5	8	0.500/ 25	18	Secondary

3 ELECTRICAL SPECIFICATION:

SNO	PARAMETER	SPECIFICATION	EQUIPMENT
1	Primary Inductance at 1KHz/ 1V	1.0 mH ± 15%	HP LCR meter 4263A
3	Primary Resistance	800 mΩ maximum	HP LCR meter 4263A
4	Breakdown at 1KVrms 50Hz/ 2secs between Primary-Secondary Primary-Core Secondary-Core	No breakdown during test	Kanji breakdown tester
5	Operation temperature range	10°C - 130°C	
6	Max. working voltage	380V Dc	
7	Layer short test	No shorting between layers	TH2882 Impulse Winding Tester

4 MATERIAL PART LIST:

SNO	ITEM	PART SPECIFICATION	MATERIAL	ROHS	UL
1	FERRITE CORE	EF 25/13/07	N32 or eqv	YES	-
2	BASE	EE 25 8 Pin BASE ϕ0.80mm round pin	VALOX 420 SEO or eqv	YES	E121562
3	MAGNET WIRE	ϕ0.315mm (30 SWG), ϕ0.500mm (25 SWG)	POLY URETHANE 2UEW Class 130'C	YES	E84201
4	TAPE	Yellow insulation	POLYESTER	YES	E81174
		Margin tape			
5	SOLDER	Lead free	Sn/Ag/Cu – 96.5/3.0/0.5	YES	-

Date	Prepared by	Approved by	Revision status & Format no
12-22-2006	V. Ram	22/12/1	B/F-7.1.1.1

SINANICS COMPONENTS PRIVATE LIMITED
A-4, SIDCO INDUSTRIAL ESTATE, ARUMBAKKAM, CHENNAI-600106
PH. 23635264, 23633523, fax 23634706, EMAIL: sinanics@md4.vsnl.net.in

CUSTOMER: DMT Ltd.
PART NO : Transformer (Memco C2851)
QUANTITY :

MODEL NO :
ITEM : EE 25/13 TRANSFORMER
DATE : 12/22/2006

LAYER DIAGRAM:

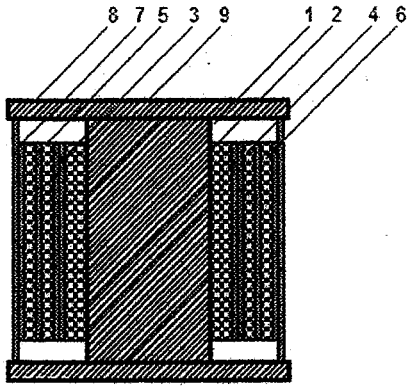

DESCRIPTION:

LAYER POSITION	LAYER DESCRIPTION
1	2mm creepage tape (Margin tape 2mm thickness)
2	Primary winding (S1)
3	Primary insulation (Polyester insulation tape double layer)
4	Auxiliary winding (S2)
5	Primary 2 insulation (Polyester insulation tape double layer)
6	Secondary winding (S3)
7	Secondary insulation (Polyester insulation tape double layer)
8	Final taping (Polyester insulation tape)
9	Bobbin

Master Contract: 173023
Report: 1586962
Project: 1892444
Illustration: 11/ 2 of 4

Date	Prepared by	Approved by	Revision status & Format no
12-22-2006	V. [illegible]	[illegible] 22/12	B/F-7.1.1.1

SINANICS COMPONENTS PRIVATE LIMITED
A-4, SIDCO INDUSTRIAL ESTATE, ARUMBAKKAM, CHENNAI-600106
PH. 23635264, 23633523, fax 23634706, EMAIL: sinanics@md4.vsnl.net.in

CUSTOMER: DMT Ltd.
PART NO : Transformer (Memco C2851)
QUANTITY :

MODEL NO :
ITEM : EE 25/13 TRANSFORMER
DATE : 12/22/2006

TEST REPORT:

MEASURING INSTRUMENT: HP 4263A LCR and Kanji HI-POT insulation tester
Measurement at 1V/1KHz

S.No ▼	Primary Inductance ▼	Primary DCR ▼	Breakdown Test ▼
Specification ▶	1.00 mH +/- 15%	800 mΩ max	@ 1KVrms/ 50Hz for 2 secs No visible breakdown of insulation
1	1.05	701	OK
2	1.02	702	OK
3	1.02	709	OK
4	1.04	699	OK
5	1.03	703	OK
6	1.05	701	OK
7	1.02	697	OK
8	1.03	703	OK
9	1.02	696	OK
10	1.02	705	OK
11	1.03	704	OK
12	1.04	698	OK
13	1.02	701	OK
14	1.02	697	OK
15	1.03	702	OK

Master Contract: 173023
Report: 1586962
Project: 1892444
Illustration: 11/ 3 of 4

Date	Prepared by	Approved by	Revision status & Format no
12-22-2006	V. [illegible]	[illegible] 22/12	B/F-7.1.1.1

SINANICS COMPONENTS PRIVATE LIMITED
A-4, SIDCO INDUSTRIAL ESTATE, ARUMBAKKAM, CHENNAI-600106
PH. 23635264, 23633523, fax 23634706, EMAIL: sinanics@md4.vsnl.net.in

CUSTOMER: DMT Ltd.
PART NO : Transformer (Memco C2851)
QUANTITY :

MODEL NO :
ITEM : EE 25/13 TRANSFORMER
DATE : 12/22/2006

PRODUCT DIAGRAM:

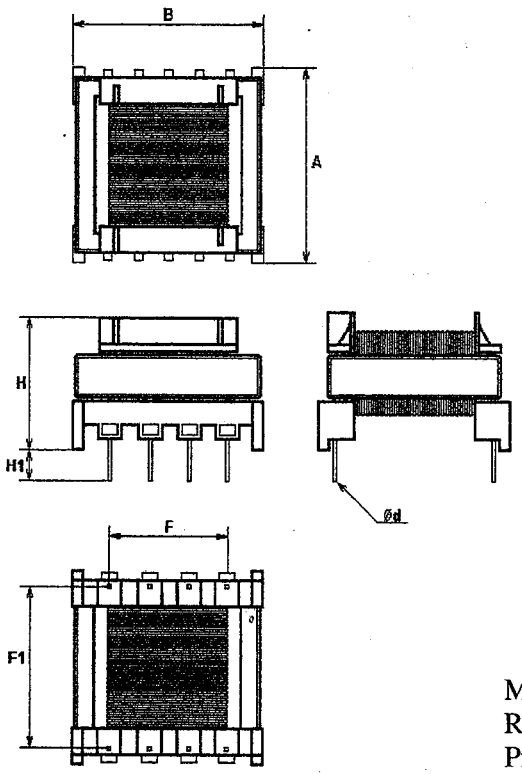

Master Contract: 173023
Report: 1586962
Project: 1892444
Illustration: 11/ 4 of 4

DIMENSION (All measurements in mm):

A	B	Ød	F	F1	H	H1
28.00 max	26.00 max	0.80 +/- 0.05	20.00 +/- 0.50	15.00 (3X5.00) +/- 0.50	21.00 +/- 0.50	5.00 +/- 0.50
27.65	25.60	0.78	20.35	14.95	20.95	4.85
27.67	25.52	0.77	20.39	14.92	20.95	4.66
27.65	25.53	0.78	20.42	15.15	21.10	4.69
27.67	25.54	0.78	20.38	15.05	20.92	4.77
27.64	25.71	0.77	20.32	15.12	21.05	4.69
27.80	25.47	0.79	20.34	14.98	21.01	4.64
27.71	25.60	0.79	20.45	14.91	21.06	4.72
27.65	25.58	0.79	20.38	14.85	20.94	4.84
27.62	25.66	0.78	20.35	15.18	21.13	4.75
27.67	25.53	0.78	20.30	15.12	21.08	4.87
27.66	25.61	0.78	20.42	15.11	20.95	4.82
27.67	25.58	0.79	20.38	14.95	20.94	4.79
27.64	25.52	0.77	20.41	15.03	20.98	5.01
27.69	25.53	0.80	20.39	14.92	21.02	4.65

Date	Prepared by	Approved by	Revision status & Format no
12-22-2006	V. [illegible]	[illegible]	B/F-7.1.1.1

SINANICS COMPONENTS PRIVATE LIMITED
A-4, SIDCO INDUSTRIAL ESTATE, ARUMBAKKAM, CHENNAI-600106
PH. 23635264, 23633523, fax 23634706, EMAIL: sinanics@md4.vsnl.net.in