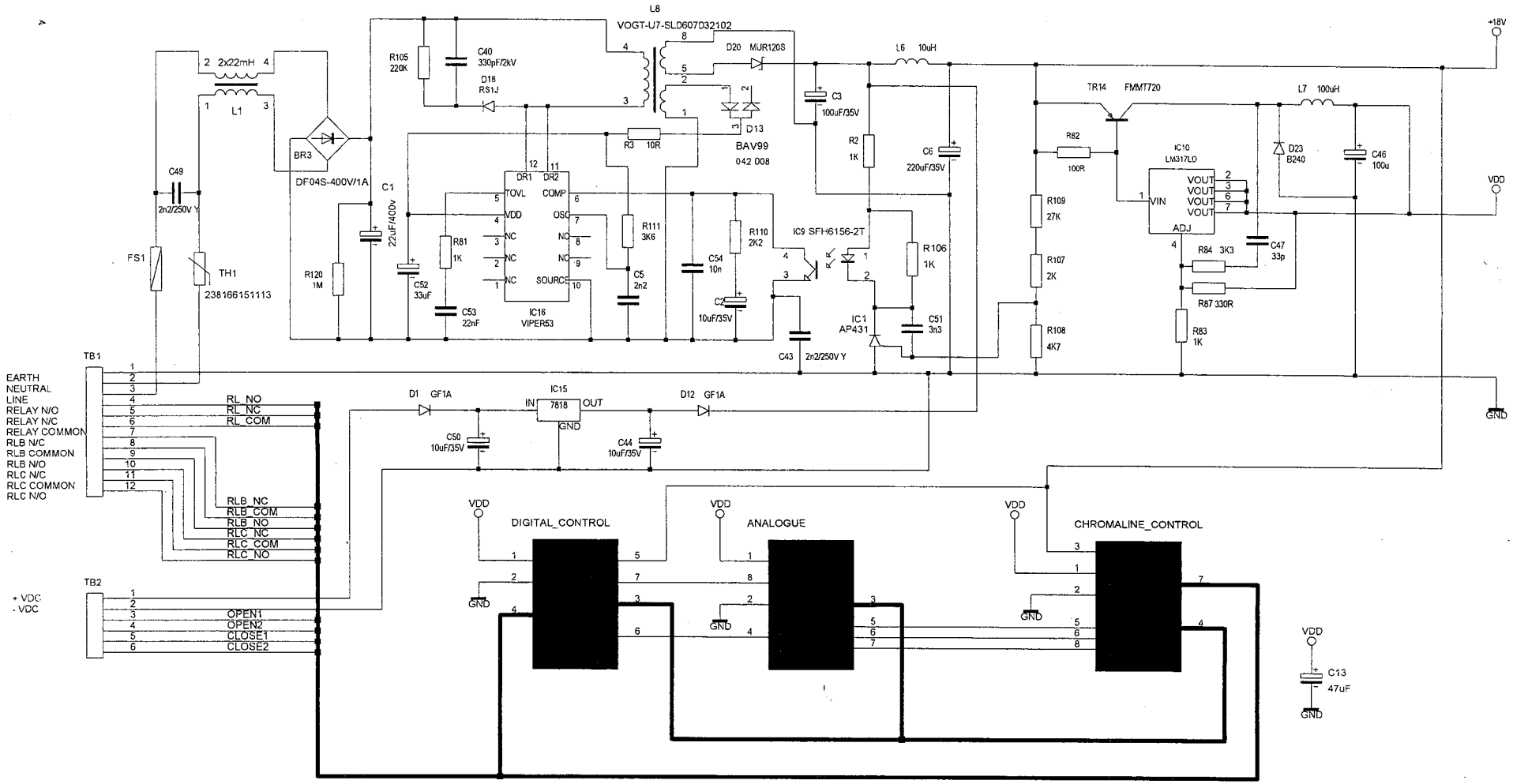

Master Contract: 173023
Report: 1586962
Project: 1892444
Illustration: 7/ 1 of 4

Reference Pad 1.5mm REF1

Mounting Hole 3.5mm X1 GND
Mounting Hole 3.5mm X2 GND
Mounting Hole 3.5mm X3 GND
Mounting Hole 3.5mm X4 GND
Mounting Hole 3.5mm X5 GND
Mounting Hole 3.5mm X6 GND

MEMCO LTD

A
HALMA GROUP COMPANY

TITLE: PANACHROME CONTROLLER - BLOCK DIAGRAM		ISSUE	ECN
DRAWING NO. 101 005 905	SHEET 1 OF 4	A	
DRAWN BY: DAVE GASKIN	CHKD. BY:		
DATE: 29 JULY 2006	CHKD. DATE:		

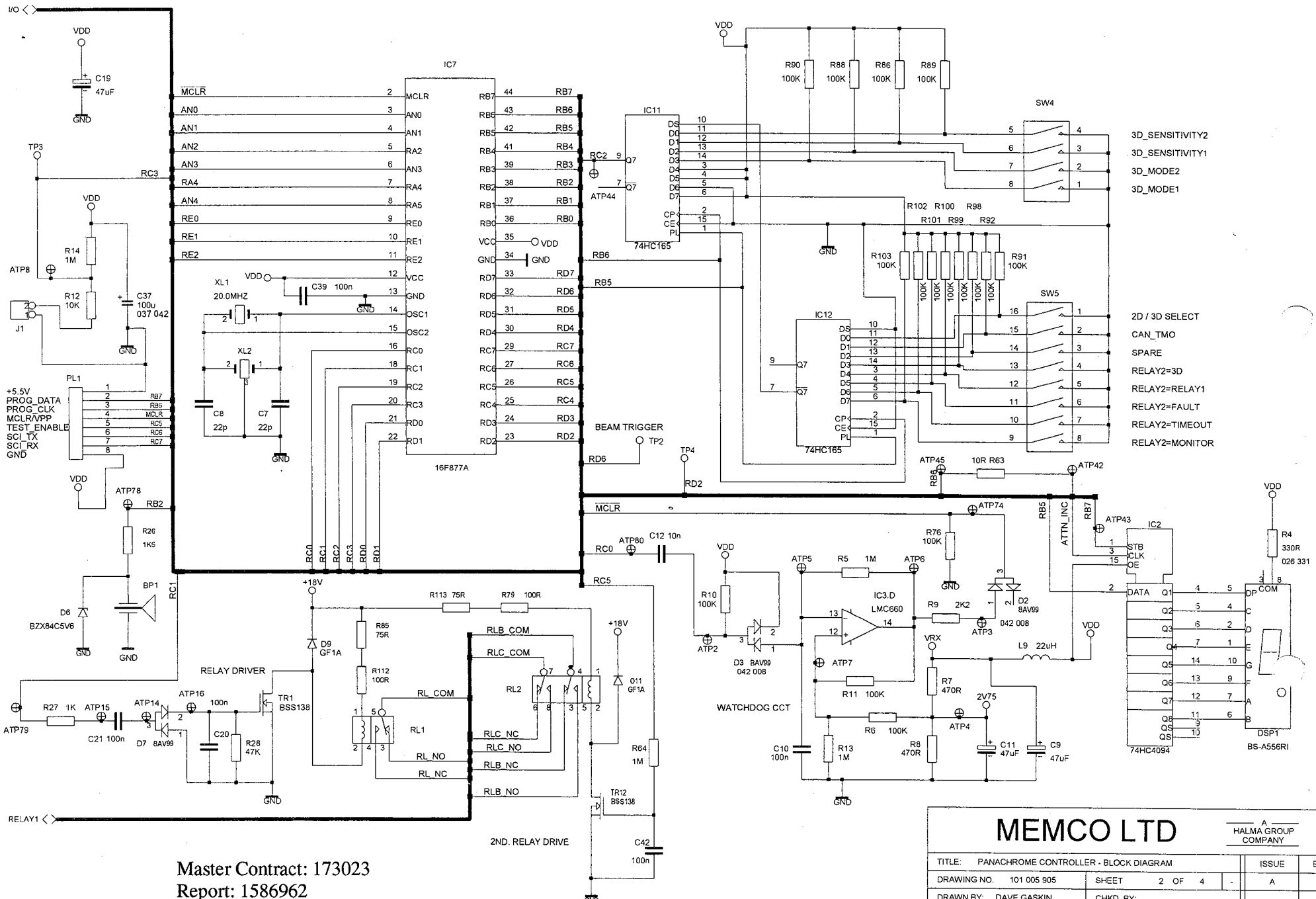

MEMCO LTD

A
HALMA GROUP COMPANY

TITLE: PANACHROME CONTROLLER - BLOCK DIAGRAM		ISSUE	ECN
DRAWING NO. 101 005 905	SHEET 2 OF 4	A	
DRAWN BY: DAVE GASKIN	CHKD. BY:		
DATE: 14 JUNE 2006	CHKD. DATE:		

Master Contract: 173023
Report: 1586962
Project: 1892444
Illustration: 7/ 2 of 4

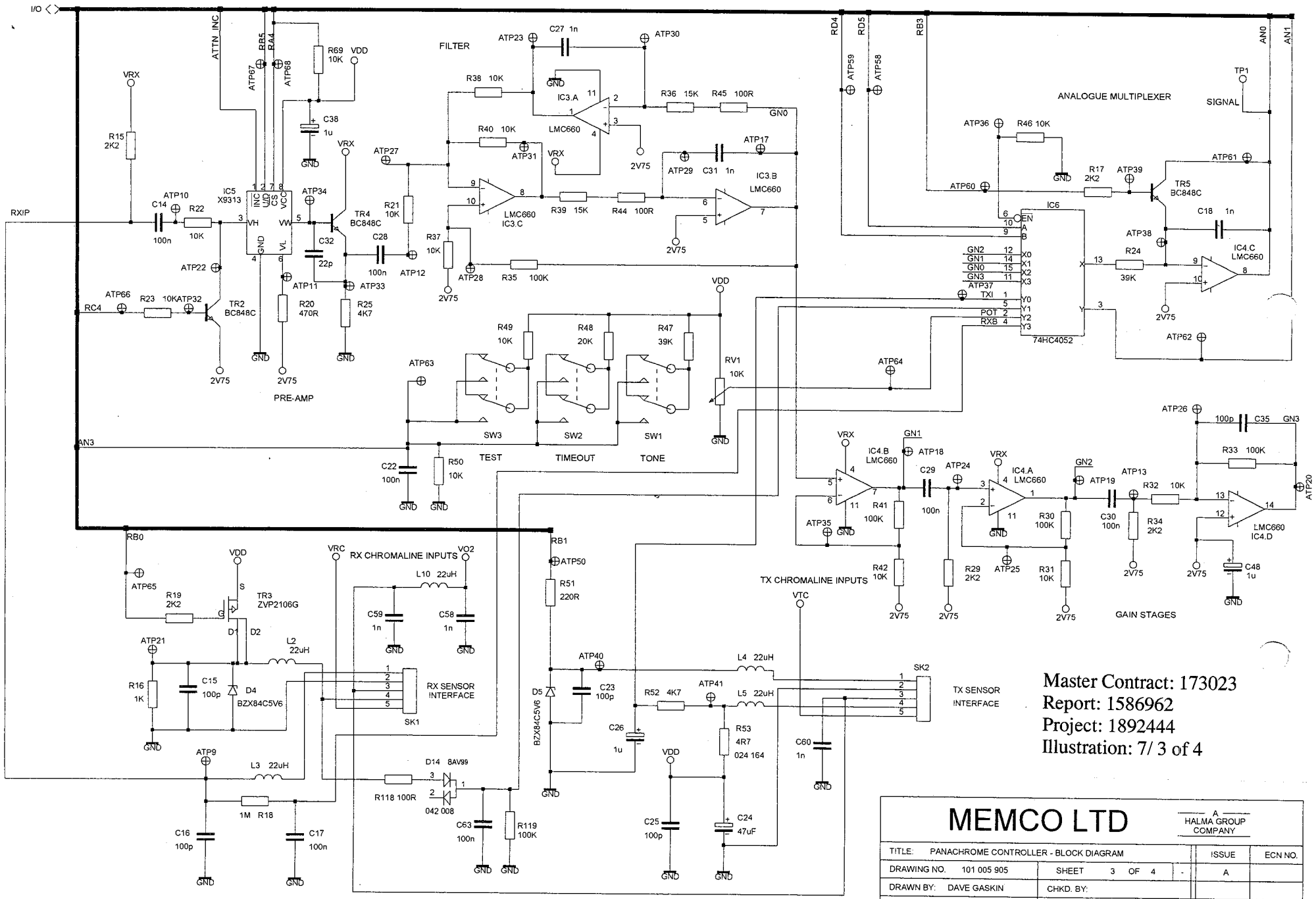

Master Contract: 173023
Report: 1586962
Project: 1892444
Illustration: 7/ 3 of 4

MEMCO LTD		A HALMA GROUP COMPANY	
TITLE: PANACHROME CONTROLLER - BLOCK DIAGRAM		ISSUE	ECN NO.
DRAWING NO. 101 005 905	SHEET 3 OF 4 -	A	
DRAWN BY: DAVE GASKIN	CHKD. BY:		
DATE: 14 JUNE 2006	CHKD. DATE:		

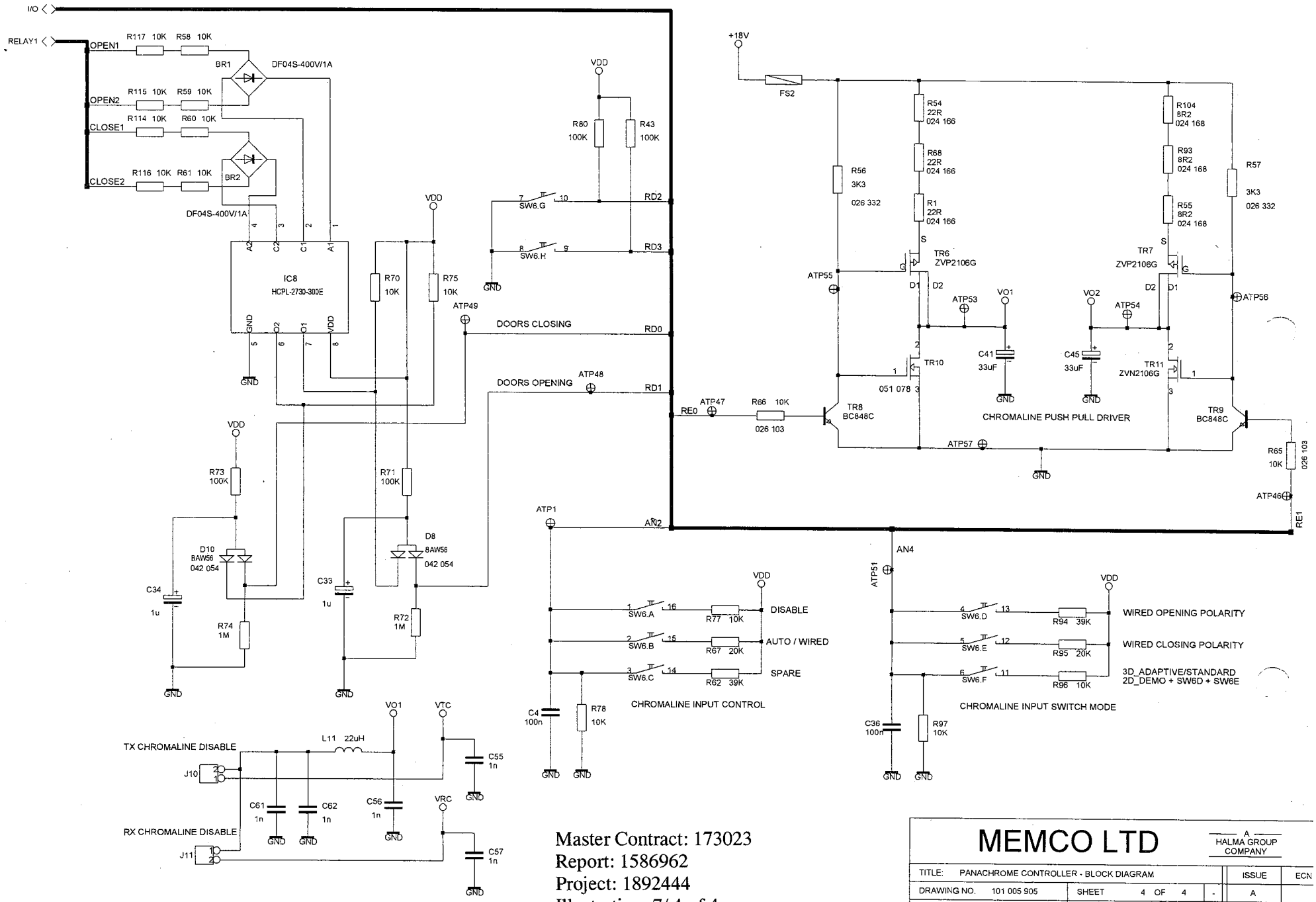

Master Contract: 173023
Report: 1586962
Project: 1892444
Illustration: 7/ 4 of 4

MEMCO LTD			A HALMA GROUP COMPANY	
TITLE: PANACHROME CONTROLLER - BLOCK DIAGRAM			ISSUE	ECN
DRAWING NO. 101 005 905	SHEET 4 OF 4	-	A	
DRAWN BY: DAVE GASKIN	CHKD. BY:			
DATE: 14 JUNE 2006	CHKD. DATE:			