SAFETY ISOLATING TRANSFORMER
NON SHORT CIRCUIT PROOF
TYPE EI38X13.6
ENCAPSULATED
MEET EN61558-1& EN61558-2-6
MEET UL 506
PRIMARY:2X115V 50/60HZ
SECONDARY:2X12V
NO LOAD OUTPUT VOLTAGE:1.3X SEC VOLTAGE
NO LOAD PRIMARY CURRENT: 25mA MAX
PRIMARY RESISTANCES: 555 & 650oHMS
SECONDARY RESISTANCES: 13.5 & 15.8 oHMS

MATERIAL LIST
1: BOBBIN A3X2G5 UL94V0 (UL E41871)
3: SECONDARY WINDINGS MW79/80
4: PRIMARY WINDINGS MW79/80
5: YELLOW POLYESTER TAPE (3LAYERS)
6: EI38x13.6 CORE
7: BOX A3X2G5 UL94V0 (UL E41871)
FILLING COMPOUND: UL94V0 PU RESIN
TYPE 552FL (UL E108835)

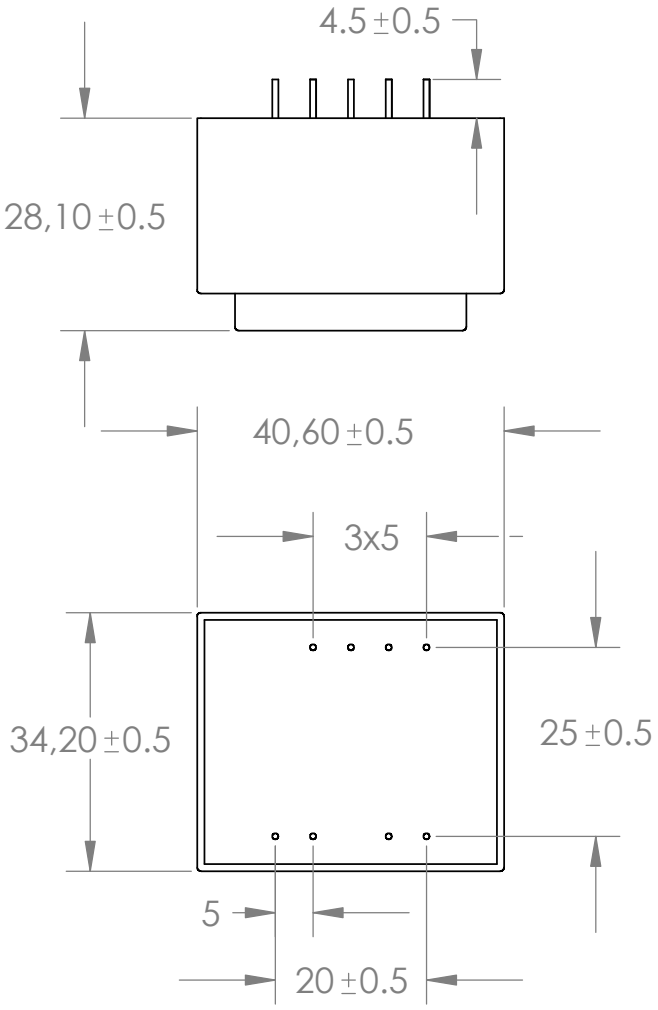

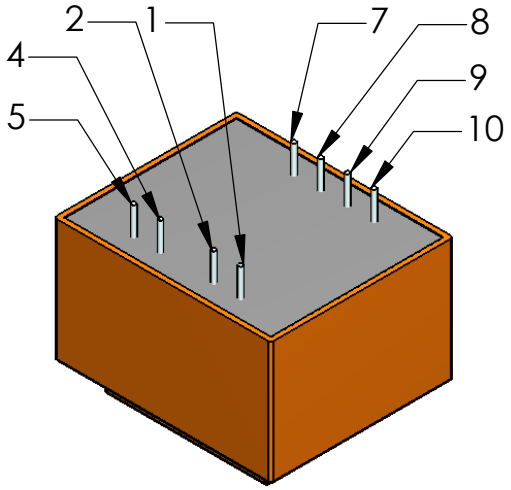

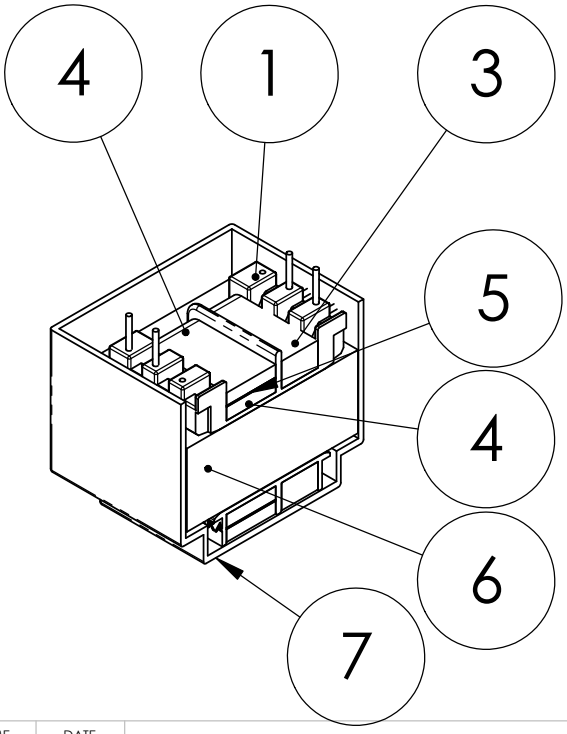

				NAME	DATE
		DIMENSIONS ARE IN MM TOLERANCES: FRACTIONAL ± ANGULAR: MACH ± BEND ± TWO PLACE DECIMAL ± THREE PLACE DECIMAL ±	DRAWN	JPM	07/06/10
			CHECKED		
			ENG APPR.		
			MFG APPR.		
		MATERIAL	Q.A.		
NEXT ASSY	USED ON	FINISH	COMMENTS:		
APPLICATION		DO NOT SCALE DRAWING			

MYRRA SAS

3VA 2X115/2X12
FOR MEMCO

SIZE A | DWG. NO. data sheet 26339 | REV.
SCALE:1:1 | WEIGHT: | SHEET 1 OF 1

PROPRIETARY AND CONFIDENTIAL
THE INFORMATION CONTAINED IN THIS DRAWING IS THE SOLE PROPERTY OF MYRRA SAS. ANY REPRODUCTION IN PART OR AS A WHOLE WITHOUT THE WRITTEN PERMISSION OF MYRRA SAS> IS PROHIBITED.