SPECIFICATION:	3C*26AWG+FPS /NONUL

ITEM		SPECIFICATION
CONDUCTOR	AWG	26AWG
	MATERIAL	BARE COPPER
	COND.SIZE	25/0.08±0.008mm
INSULATION	AVG.THICK	0.23mm
	MATERIAL	HD-PE
	O D	1.10±0.10mm
	NO.	3C
PAPER	COVERAGE	100%
	OVERLAP	25%MIN
SPIRAL	MATERIAL	TINNED COPPER
	SIZE	55±3/0.12±0.008mm(90%MIN)
JACKET	AVG.THICK	0.50mm
	MATERIAL	HALF MATTE PVC (-40+105℃)
	COLOUR	BLACK
	OD	6.00±0.25mm

CONSTRUCTION D. W. G.

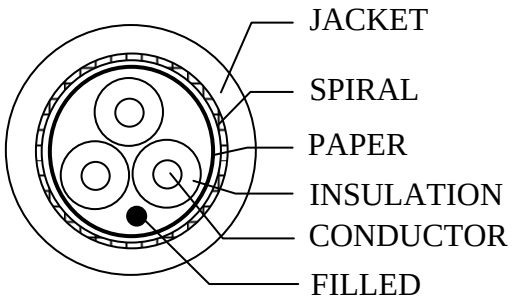

COLOUR CODE:

3C: 1.WHITE 2.RED 3.BLUE

MARKING

Kunshan Woren 26AWGX3C 300V

REMARK

RoHS **0-15 33-1**

字高：1.2mm 組別：1 組字 文字總長：

ELECTRICAL CHARACTERISTICS

1.Rating :TEMP 80℃ VOLTAGE 300V
2.Conductor Resistance : at 20°C MAX
26AWG：150Ω/km

PHYSICAL PROPERTIES OF JACKET

1. Tensile strength: Unaged :MIN 1500PSI
Aged : MIN70%
2. Elongation : Unaged: 100%MIN Aged: 65%MIN
3. Heat shock test : No cracking
4. Cold bend test: No cracking
5. Deformation test:MAX 50%

Kunshan Woren Industrial and Trading Co.,Ltd

	PART NO.	90340A0000	
APPROVED		**CUSTOMER**	Avire
CHECKED		**REV.**	C
DRAWING	***Sun Xiang***	**DATE**	2015-3-10

F-GC-03-02a

MASTER CONTRACT: 173023
REPORT: 1089167 (LR 53335-17)
PROJECT: 70031145
III_49 Page 1 of 1