DRG. No. 004 246 -A4

ISSUE	ECN No.
A	————
B	21.09.00

DRAWN TO B.S. 308

REMOVE ALL BURRS

ALL DIMENSIONS IN MILLIMETERS

TOLERANCES UNLESS OTHERWISE STATED
ONE DEC PLACE ± 0.5
TWO DEC PLACE ± 0.1
ANGULAR ± 0° 30'

SCREW THREADS

UNLESS OTHERWISE STATED ALL SCEW THREADS ARE TO BE ISO METRIC COARSE SERIES MEDIUM FIT (6H6g – B.S.3643)

IF IN DOUBT ASK

DO NOT SCALE

THIRD ANGLE PROJECTION

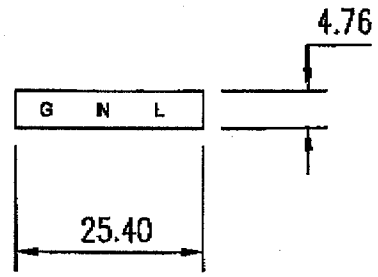

ACTUAL SIZE

G N L

SCALE 2 : 1

REPORT: 173023
ILL.21
PROJECT: 1089167

PRINTING :– 1.7mm HIGH BLACK CHARACTERS ON WHITE BACKGROUND.

THIS DOCUMENT IS ISSUED SOLELY ON THE UNDERSTANDING THAT IT IS COPYRIGHT AND REGARDED AS CONFIDENTIAL, IT MUST NOT BE USED OR REPRODUCED WITHOUT THE PRIOR WRITTERN CONSENT OF MEMECO LIMITED

MATERIAL: BL 0014

FINISH

DRAWN BY: LH
DATE: 28.02.00
CHKD BY
DATE

MEMCO LTD

HALMA GROUP COMPANY

ORIGINAL SCALE 1 : 1

SHEET 1 OF 1 SHEETS

TITLE LABEL TERMINAL BLOCK 12 – WAY MAINS PANA40 PLUS (MODEL 843)

DRG. No. 004 246

No. 843 000 -A2

IF IN DOUBT ASK

DO NOT SCALE

THIRD ANGLE PROJECTION

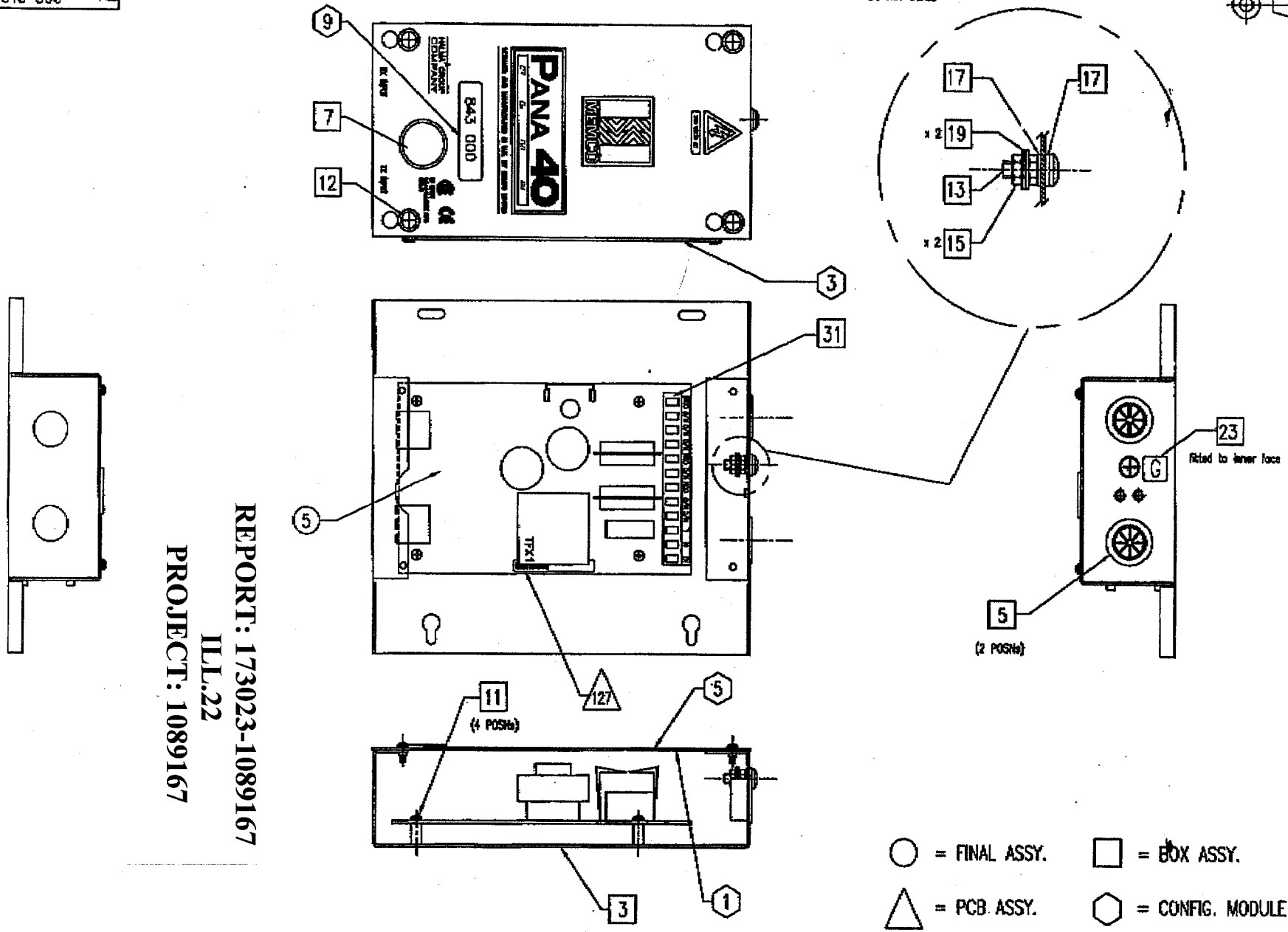

○ = FINAL ASSY. □ = BOX ASSY.

△ = PCB ASSY. ⬡ = CONFIG. MODULE ASSY.

REPORT: 173023-1089167
ILL.22
PROJECT: 1089167

ISSUE	1									SCREW THREADS	THIS DOCUMENT IS ISSUED SOLELY ON THE UNDERSTANDING THAT IT IS COPYRIGHT AND REGARDED AS CONFIDENTIAL. IT MUST NOT BE USED OR REPRODUCED WITHOUT THE PRIOR WRITTEN CONSENT OF MEMCO LIMITED	DRAWN TO B.S. 308	MATERIAL	DRAWN BY TD	MEMCO LTD	HALMA GROUP COMPANY	
DATE	26.09.00									UNLESS OTHERWISE STATED ALL SCREW THREADS ARE TO BE ISO METRIC COARSE SERIES MEDIUM FIT (BMg - B.S.3643)		REMOVE ALL BURRS	SEE PARTS LIST	DATE 29.02.00			
No.												ALL DIMENSIONS IN MILLIMETRES	FINISH	CHKD BY	ORIGINAL SCALE N.T.S.	SHEET 1 OF 1 SHEETS	
REVISION												TOLERANCES UNLESS OTHERWISE STATED ONE DEC PLACE ± 0.5 TWO DEC PLACE ± 0.1 ANGLES ± 0° 30'		DATE	TITLE CONTROLLER ASSY. PANA40 PLUS	DRG. No. 843 000	

OXFORD ELECTRICAL PRODUCTS
15-17 Industrial Estate Wroslyn Road Freeland Witney Oxon OX8 8HZ. UK.

Telephone : 01993 883214 Fax : 01993 882500

FACSIMILE COVER SHEET

TO Memco	FAX NO 01628 24947
FAO Dave Gaskin	TEL NO
FROM Robin Hill	
Date 26-3-96	This Sheet Plus 6 Pages

MESSAGE :

LR 53335-17
Ill. 2 pg. 1 of 7

Enclose information on the G3812/14 transformer.

Robin Hill

G3812/14

Insulation Charateristics

Creepage & Clearance >6mm

Proof voltage <3.75kvrms

LR 53335-17
111.2 pg. 2 of 7

Material specifcations

Winding wire
Polyurethane coated copper wire to BS6811 sec.3 (1) class F.

Insulation tape
3M No.56 self-adhesive polyester tape, 0.06mm thick.

Bobbin & Shroud
Technyl A20V25 - See attached sheets for details

[redacted]

TL/014/AN/92.01

LR 53335-17

Technyl A 20

III.2 pg. 3 of 7

Technyl A 20 V 25

Description	The range of TECHNYL type 6.6 polyamides includes two grades with improved fire resistance: - TECHNYL A 20: an unreinforced 6.6, heat-stabilised, of medium viscosity	- TECHNYL A 20 V 25: a 6.6 reinforced with glass fibre and heat-stabilised. These two grades include an halogen-free flame retardant system.
Specific properties	- UL 94 V-0 flame class in a thickness of 0.8 mm - high rigidity: modulus 3 200 to 7 500 MPa dry - heat stability: deflection	temperature under load (1.80 MPa): 240 to 250°C - tracking resistance: KC 575 and 375.
Applications	A 20 and A 20 V 25 are mostly used in the electrical and electrical engineering industries for parts such	as connector blocks, switch cases, isolators, coil formers, switches, programmer components, etc...
Packaging	These grades are supplied in ready to use airtight bags.	Standard colours: natural (brick red) and black. Certain dark colours can be supplied on request.

1303-2343061
1089167 Att4 Illustrations Page 5 of 47

Properties

LR 53335-17

III.2 p. 4 of 7

Nowadays, specifications increasingly require the use of polyamides with improved fire resistance.
A 20 and A 20 V 25 are designed to meet the highest standards, in particular the Underwriters Laboratories approval tests.
UL 94 test - UL approval of engineering plastics is granted according to the following characteristics :
– flame class, governed by standard UL 94
– temperature indices under standard UL 746B
– basic properties under standard UL 746A.
There are four flame classes :

class	combustion test
UL 94 HB	horizontal specimen
UL 94 V-2	vertical specimen
UL 94 V-1	vertical specimen
UL 94 V-0	vertical specimen

The results are given for each material, in each colour, and in a given thickness. This last point, the thickness, is very important because comparisons with other materials can only be made for an equivalent thickness.
Limit oxygen index (LOI) -
This is also a common criterion.
A substance which burns has an LOI of less than 21. The higher the index, the less flammable the substance will be.
Table 1, which gives the principal measurements of fire resistance, shows the very good performances of A 20 and A 20 V 25 grades :
– V-0 rated for thicknesses of 0.8 mm, i.e. very thin.
The high mechanical properties of TECHNYL grades, even at such thicknesses, meet the current need for increasingly compact assemblies,
– limit oxygen index over 30,
– non-corrosive fumes.

Properties	Norm	A 20	A 20 V 25
Flammability	UL 94 - 0.8 mm thick 1.6 mm thick ISO R 1210 - 3.17 mm thick	V-0 V-0 category 1 II b grade	V-0 V-0 category 1 II b grade
Fire resistance (epiradiator class)	Rhône-Poulenc evaluation under NF P 92 501 3.2. mm thick	M 3	M 3
Heated finger at 300 °C	VDE 0470 NF C 62-411	satisfactory good	satisfactory good
Hot wire at 960 °C	VDE 0471 - 3.1 mm thick	good	good
Oxygen index	ASTM D 2763-70	31.5	30.5
Smoke corrosiveness	UTE C 20 453	< 20 %	< 20 %
Flash point	ISO R 811	> 350 °C	> 350 °C

Table 1

Mechanical and thermal properties.

A 20 and A 20 V 25 are type 6.6 polyamides, and therefore have good mechanical and thermal properties.
The summary table gives the main properties at relative humidities of 0 and 50 %
In particular, the high modulus and deflection temperature under load should be noted.

Reaction to thermal ageing.

Table 2 shows the mechanical properties of the two grades after 7 days' thermal ageing at 125 °C, compared with the initial characteristics in a dry state.
The good reaction to thermal ageing of A 20 and A 20 V 25 can be seen.

Tracking resistance.

The tracking resistance test is used for materials in contact with live metal parts.
Both grades maintain a good tracking resistance of KC 575 and 375.

		Unit	Dry state - 23 °C		After 7 days' ageing at 125 °C	
			A 20	A 20 V 25	A 20	A 20 V 25
TENSILE	breaking stress modulus of elasticity	MPa MPa	75 3500	135 8600	73 3150	137 9000
FLEXURAL	stress under maximum load modulus of elasticity	MPa MPa	125 3200	205 7500	123 3060	2060 7600
CHARPY IMPACT	unnotched specimen	kJ/m²	21	24	–	21

Main properties

measurements at 23 °C

LR 53335-17
III.2 pg. 5 of 7

	Properties	AFNOR	ISO/CEI	TEST METHO ASTM
Physical/Thermal	specific gravity	NFT 51-063	R 1183	D-792
	moisture absorption			
	– 24 hours at 23 °C	NFT 51-166	62	D-570
	– 30 minutes at 100 °C	NFT 51-166	–	–
	melting point	NFT 51-049	R 1218	D-2117
	coefficient of linear expansion	NFT 51-221	–	D-696
	deflection temperature under load			
	– 0.45 MPa	NFT 51-005	75	D-648
	– 1.80 MPa	NFT 51-005	75	D-648
Mechanical	TENSILE			
	breaking stress	NFT 51-034	R 527	D-638
	elongation at break	NFT 51-034	R 527	D-638
	modulus of elasticity	NFT 51-034	R 527	D-638
	FLEXURAL			
	breaking stress	NFT 51-001	178	D-790
	modulus of elasticity	NFT 51-001	178	D-790
	CHARPY IMPACT			
	unnotched specimens	NFT 51-035	179	–
	notched specimens	NFT 51-035	179	D-256 B
	HARDNESS			
	hardness index	NFT 51-024	2039	–
	Rockwell A	–	2039/2	D-785
Electrical	volume resistivity	NFC 26-215	CEI 93	D-257
	dielectric strength	NFC 26-225	CEI 243	D-149
	dielectric dissipation factor tg δ 50 Hz	NFC 26-230	CEI 250	D-150
	dielectric constant εr 50 Hz	NFC 26-230	CEI 250	D-150
	tracking resistance			
	– KC	NFC 26-220	CEI 112	D-3638
	– KB	NFC 26-220	CEI 112	–

ariel

ARIEL PRESSINGS LTD

WOLLATON ROAD, BEESTON, NOTTINGHAM NG9 2PB
TELEPHONE: (0115) 925 6141 FAX: (0115) 943 0838

F82	TRANSFORMER TEST RESULTS	REV: AUG 95
CUSTOMER: MEMCO	DATE: 20.3.96	A No. (CA2150)
CONTACT: BILL GOLDIE	TELEPHONE:	FAX:

ADDRESS:

DETAILS OF SPECIFICATION:

LR 53335-17
III. 2
p. 6 of 7

3VA TRANSFORMER:- INPUT 0-120V/0-120V
OUTPUT 0-12V/0-12V

TEST RESULTS:

NO LOAD PRIMARY CURRENT AT 240V	=	14mA
OFF LOAD SECONDARY VOLTS	=	0-15.4V/0-15.4V
ON LOAD PRIMARY CURRENT	=	23mA
ON LOAD SECONDARY VOLTS @ 3VA	=	0-12.2V/0-12.2V

TEST RESULTS VERIFICATION

SIGN: DATE: 20.3.96

This drawing/document is COPYRIGHT and the property of ARIEL PRESSINGS LIMITED. It must not be copied (in whole or part), used for manufacture or otherwise disclosed without prior written consent of the company. Any copies of this drawing/document made by any method, must also include a copy of this legend. © 19

DO NOT SCALE | IF IN DOUBT, ASK! | THIRD ANGLE PROJECTION | CA 2150

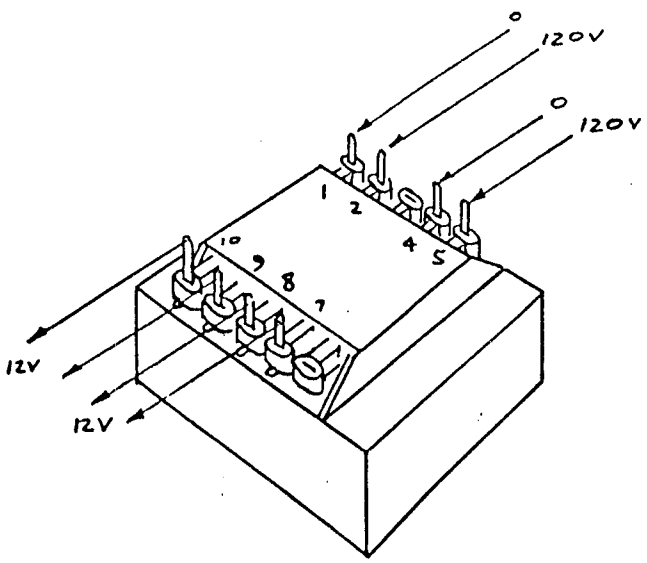

PART Nº	DESCRIPTION	QTY	SUPPLIER	TYPE
R12 / 1795	BOBBIN EI38 x 13,6 SDS	1	MILES PLATTS	TAG AT 1 2 4 5 7 8 9 10 TYPE 301
R12/ 1290	FULL SHROUD 'L' STYLE	ONE SET	" "	
WM 246	WINDING WIRE 0,071	11 gms		BS4520 GD1
WM 615	" " 0,17	12 gms		" "
R12 / 1291	LAMINATION EI 38	103 gms		TYPE 800-50
	LABEL	1		
	SOLDER	A/R		
	VARNISH	A/R		

LR 53335-17

Ill. 2 Pg. 7 of 7

SALES COPY
UNCONTROLLED
18 MAR 1996

PRI. ENDS SKEINED

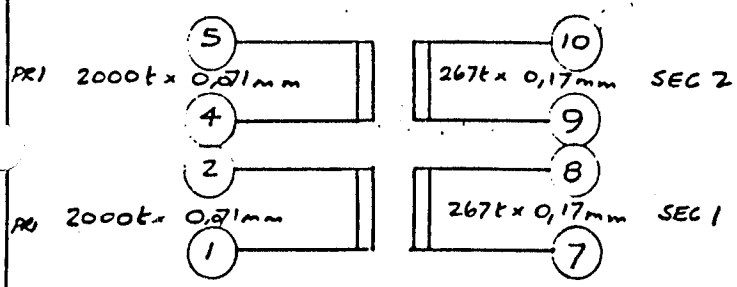

ITEM	PART NUMBER	DESCRIPTION	QTY.

DATE	ISSUE	MODIFICATION	DATE	ISSUE	MODIFICATION
4.9.92	1	—	2-10-91	6	PD4606
23.9.92	2	PD4437			
12.5.93	3	PD4475			
15.7.93	4	PD4489			

CA 2150	TRANSFORMER 12 + 12v 3VA	MATERIAL	FINISH	
ARIEL PRESSINGS LIMITED		TOLERANCES unless stated	SCALE	ALL DIMENSIONS ARE IN MILLIMETRES unless stated
				DRAWN / CHECKED / APPROVED

WESTROPP

MANBY PARK WESTROPP
A trading division of ARO Limited Registered in England No 306 5721
Manby Park, Louth, Lincolnshire, LN11 8UT
Telephone : (01507) 328031 Fax : (01507) 328039

LR 53335-17 appl'n -18
Ill. 7 pg. 1 of 12

FAX MESSAGE

TO DAVE GASKIN DATE 24/4/97

COMPANY MEMCO FAX NO. 01628-410052

FROM: CHRIS FAIR TOTAL PAGES: 4

SUBJECT: TRANSFORMER SPECIFICATION

MATERIAL SPECIFICATION FOR TRANSFORMER SUPPLIED TO MEMCO BY MANBY PARK WESTROPP.

BOBBIN / SHROUDS : FORMERS UK LTD
TECHNYL A2D V25
MANUFACTURERS UL FILE NO E44716

WIRE : REYTON METALS
SOLDERABLE 155 GRADE 1 CLASS F
MANUFACTURERS UL FILE NO E101843

Chris Fair

C.R. FAIR
APPROVALS ENGINEER

173023-1089167

Clairtronic Ltd.

93 Whitby Road Industrial Estate, Slough, Berks, UK. SL1 3DR
Telephone : +44 (0) 1753 692022 Fax : +44 (0) 1753 535096
e-mail: sales@clairtronic.co.uk www.clairtronic.co.uk

Clairtronic

ypl'n -1349280

I11.24

Transformer Specification 3006/100/CSA/WELD

Product Description:	3VA; 97V : 12 + 12v 50/60Hz Transformer, PCB Mounting.
Bobbin:	Double Section, Class UL94V0 class B, moulded bobbin, with integral moulded dividing wall, in ULTRAMID A3X2G5, UL File E41871 (M)
Bobbin Insulation Covers:	Full Insulation Cover, class UL94V0, moulded in ULTRAMID A3X2G5, UL File E41871 (M)
Windings:	All winding wires to BSEN60317-4 (BS6811 Pt3 sect 3.1) Polyurethane round copper wire Grade 1; Class 130 or higher
Primary(s):	0 – 97V 50/60Hz wound in one section of bobbin
Secondary(s):	0 - 12v @ 0.125A; 0 - 12v @ 0.125A Two concentrically wound secondaries, in other bobbin section
Core:	20.4mm Stack of Laminations to DIN 41302
Terminations:	All windings terminated to bobbin mounted pc solder pins; Phosphor Bronze plated to BS2011: 1981
Impregnation/ Encapsulation:	Completed coil and core assembly dip coated in Class F electrical impregnating varnish
Insulation:	Electrical strength and Insulation resistance tested in accordance with BSEN60742 (BS 3535 Pt 1 clause 17)
Standards complied with:	Designed and manufactured to meet the safety requirements of BSEN60742 and BSEN60950 EEC Directive LVD 73/23/EEC – CE Marking affixed
Electrical Tests:	a. No Load Magnetisation Current b. Turns Ratio nom +/- 3% c. Induced Voltage Test @ x5 Rated Input @ x12 Rated Frequency d. Simultaneous Electrical Strength Test - 2.4Kv rms Windings to Core & 4.8Kv rms Primary to Secondaries e. Examination, Fit & Function, Performance and Safety Checks carried out at 100% level.

Clairtronic Ltd.
Shuttleworth Road, Elms Industrial Estate, Bedford. MK41 0EP UK
Telephone: +44 [0] 1234 330774 Fax: +44 [0] 1234 330775
email: sales@clairtronic.co.uk www.clairtronic.co.uk

Transformer Specification 11-3006CSA

Product Description:	3VA; 115 + 115v : 12 + 12v 50/60Hz Euro Transformer; CSA version, PCB Mounting.
Bobbin:	Double Section, Class UL94V0 moulded bobbin, with integral moulded dividing wall, in Technyl A20V25, UL File E44716 (M)
Bobbin Insulation Covers:	Full Insulation Cover, class UL94V0, moulded in Technyl A20, UL File E44716 (M)
Windings:	All winding wires to BSEN60317-4 (BS6811 Pt3 sect 3.1) Polyurethane round copper wire Grade 1; Class 130
Primary(s):	0 – 115v; 0 - 115v 50/60Hz Two concentrically wound primaries; separated by 3 layers Polyester tape, UL File E103655 (M), 0.055mm thk/layer; wound in one section of bobbin
Secondary(s):	0 - 12v @ 0.125A; 0 - 12v @ 0.125A Two concentrically wound secondaries, in other bobbin section
Core:	13.6mm Stack of Laminations to DIN 41302
Terminations:	All windings terminated to bobbin mounted pc solder pins; Phosphor Bronze plated to BS2011: 1981
Impregnation/ Encapsulation:	Completed coil and core assembly dip coated in Class F electrical impregnating varnish
Insulation:	Electrical strength and Insulation resistance tested in accordance with BSEN60742 (BS 3535 Pt 1 clause 17)
Standards complied with:	Designed and manufactured to meet the safety requirements of BSEN60742 and BSEN60950 EEC Directive LVD 73/23/EEC – CE Marking affixed
Electrical Tests:	a. No Load Magnetisation Current b. Turns Ratio nom +/- 3% c. Induced Voltage Test @ x5 Rated Input @ x12 Rated Frequency d. Simultaneous Electrical Strength Test - 2.4Kv rms Windings to Core & 4.8Kv rms Primaries to Secondaries e. Examination, Fit & Function, Performance and Safety Checks at 100% level.
RoHS Declaration:	Supplied iaw RoHS Directive 20012/95/EC

MASTER CONTRACT: 173023
REPORT: 1089167 (LR 53335-17)
PROJECT: 1033472
Illustration 15

File: Specs\Clairtronic
Prepared By: D.Griffiths
Last Change: Address Change on Letter Headed Paper

Version: 4.0
Rev: 03.01.07

D Gaskin

Transformer Specification 11-3006CSA

Product Description:	3VA; 115 + 115v : 12 + 12v 50/60Hz Euro Transformer; CSA version, PCB Mounting.
Bobbin:	Double Section, Class UL94V0 moulded bobbin, with integral moulded dividing wall, in Technyl A20V25, UL File E44715 (M)
Bobbin Insulation Covers:	Full Insulation Cover, class UL94V0, moulded in Technyl A20, UL File E44715 (M)
Windings:	All winding wires to BSEN60317-4 (BS6811 Pt3 sect 3.1) Polyurethane round copper wire Grade 1; Class 130
Primary(s):	0 – 115v; 0 - 115v 50/60Hz Two concentrically wound primaries; separated by 3 layers Polyester tape, UL File E103655 (M), 0.055mm thk/layer; wound in one section of bobbin
Secondary(s):	0 - 12v @ 0.125A; 0 - 12v @ 0.125A Two concentrically wound secondaries, in other bobbin section
Core:	13.6mm Stack of Laminations to DIN 41302
Terminations:	All windings terminated to bobbin mounted pc solder pins; Phosphor Bronze plated to BS2011: 1981
Impregnation/ Encapsulation:	Completed coil and core assembly dip coated in Class F electrical impregnating varnish
Insulation:	Electrical strength and insulation resistance tested in accordance with BSEN60742 (BS 3535 Pt 1 clause 17)
Standards complied with:	Designed and manufactured to meet the safety requirements of BSEN60742 and BSEN60950 EEC Directive LVD 73/23/EEC – CE Marking affixed
Electrical Tests:	a. No Load Magnetisation Current b. Turns Ratio nom +/- 3% c. Induced Voltage Test @ x5 Rated Input @ x12 Rated Frequency d. Simultaneous Electrical Strength Test - 2.4Kv rms Windings to Core & 4.8Kv rms Primaries to Secondaries e. Examination, Fit & Function, Performance and Safety Checks carried out at 100% level.

REPORT: 173023
ILL.15
PROJECT: 1033472

Master: F:\Shared\Spec\Chart
Prepared By: D.Griffiths

Version: 3.0
Rev: 09-12-99

Clairtronic Ltd.
Shuttleworth Road, Elms Industrial Estate, Bedford. MK41 0EP UK
Telephone: +44 [0] 1234 330774 Fax: +44 [0] 1234 330775
email: sales@clairtronic.co.uk www.clairtronic.co.uk

Transformer Specification 11-3006/CSA/WELDED

Product Description:	3VA; 115 + 115v : 12 + 12v 50/60Hz Euro Transformer: CSA version, PCB Mounting. Welded Construction
Bobbin:	Double Section, Class UL94V0 moulded bobbin, with integral moulded dividing wall, in Technyl A20V25, UL File E44716 (M)
Bobbin Insulation Covers:	Full Insulation Cover, class UL94V0, moulded in Technyl A20, UL File E44716 (M)
Windings:	All winding wires to BSEN60317-4 (BS6811 Pt3 sect 3.1) Polyurethane round copper wire Grade 1; Class 130
Primary(s):	0 – 115v; 0 - 115v 50/60Hz Two concentrically wound primaries; separated by 3 layers Polyester tape, UL File E103655 (M), 0.055mm thk/layer; wound in one section of bobbin
Secondary(s):	0 - 12v @ 0.125A; 0 - 12v @ 0.125A Two concentrically wound secondaries, in other bobbin section
Core:	13.6mm Stack of Laminations to DIN 41302
Terminations:	All windings terminated to bobbin mounted pc solder pins; Phosphor Bronze plated to BS2011: 1981
Impregnation/ Encapsulation:	Completed coil and core assembly dip coated in Class F electrical impregnating varnish
Insulation:	Electrical strength and Insulation resistance tested in accordance with BSEN60742 (BS 3535 Pt 1 clause 17)
Standards complied with:	Designed and manufactured to meet the safety requirements of BSEN60742 and BSEN60950 EEC Directive LVD 73/23/EEC – CE Marking affixed
Electrical Tests:	a. No Load Magnetisation Current b. Turns Ratio nom +/- 3% c. Induced Voltage Test @ x5 Rated Input @ x12 Rated Frequency d. Simultaneous Electrical Strength Test - 2.4Kv rms Windings to Core & 4.8Kv rms Primaries to Secondaries e. Examination, Fit & Function, Performance and Safety Checks at 100% level.
RoHS Declaration:	Supplied iaw RoHS Directive 20012/95/EC

MASTER CONTRACT: 173023
REPORT: 1089167 (LR 53335-17)
PROJECT: 1984996
Illustration 25

Issue:1

Dated: 19.10.99

File: Specs\Clairtronic
Prepared By: D.Griffiths
Last Change: Address Change on Letter Headed Paper

Version: 2.0
Rev: 26.11.07

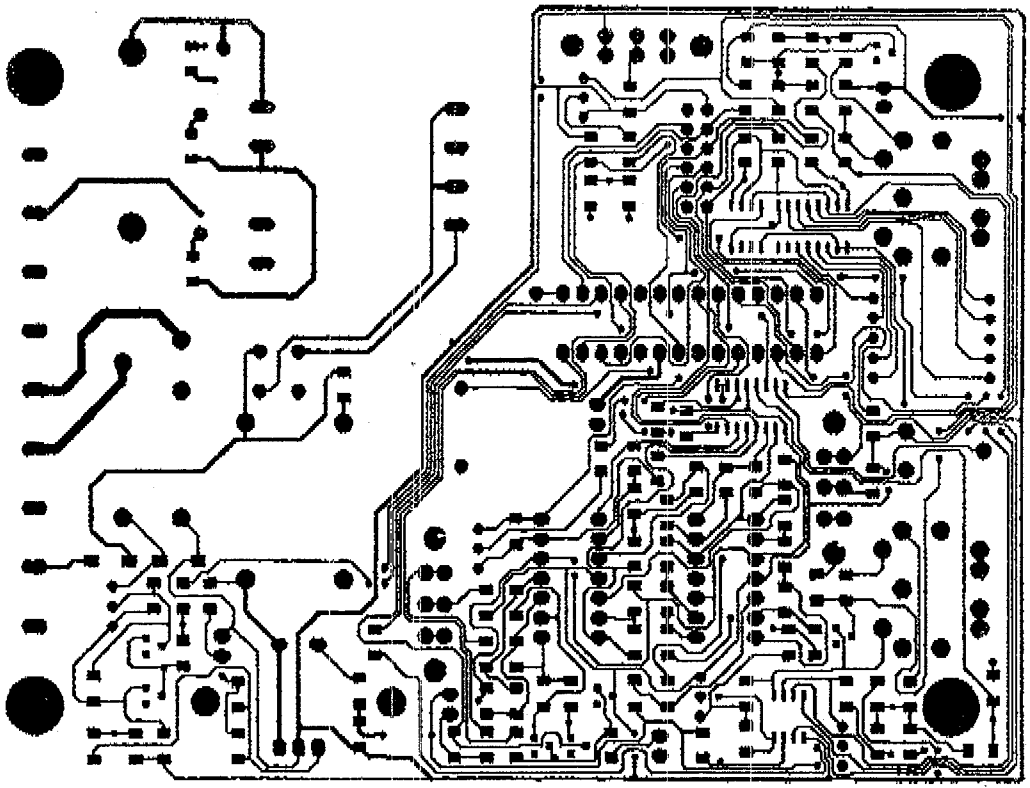

LR 53335-17

Ill. 5

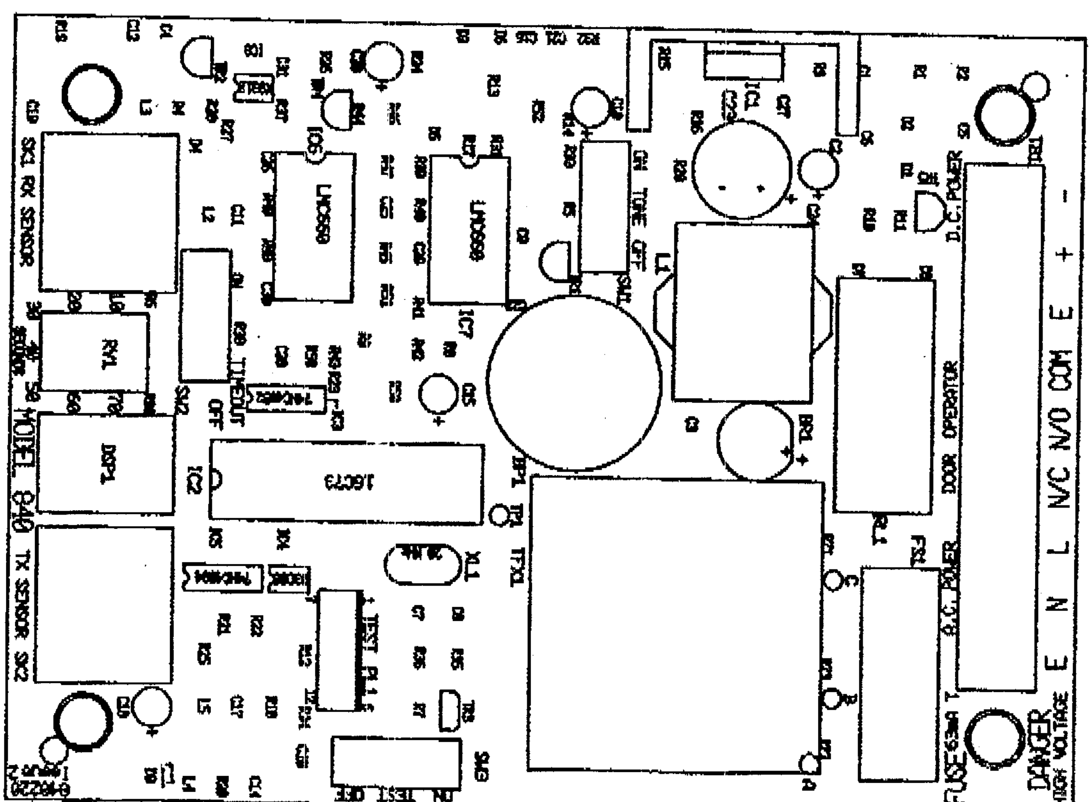

Product Group : Sub assembly

LR 53335-17

111.3 p. 1 of 2

Part No. : D840 100 Model 840 Sub Assembly Type : Sub-Assembly

Revision No. : C BOM Desc. : Model 840 P.C.B Assy Issue No : A Issue Date : 26 Nov 88

Change No's : Drawing No. : Expiry Date :

Seq.No.	Component Part	Description	Component Reference	U.O.M.	Type	Number off
1	840 220/B	Model 840 Controller PCB		EACH	BOP	1.000000
2	037 021	CAP 100nf CERAMIC 63/50v X7R	C4,6,9,13,17,26,27,28,29,21	EACH	BOP	10.000000
3	037 055	CAP 100p/50V NPO 5% SMT 1206	C11,12,14,19	EACH	BOP	4.000000
4	037 011	CAP 10nf CERAMIC 63/50v X7R	C1,3,16,24	EACH	BOP	4.000000
5	037 052	CAP 22pF CERAMIC 100V NPO 5%	C7,8,31	EACH	BOP	3.000000
6	037 058	CAP 1n/50V 5% NPO SMT 1206	C22,25,30	EACH	BOP	3.000000
7	030 057	1000uF/25V Al. Electrolytic	C23	EACH	BOP	1.000000
12	024 099	RESISTOR 100K RC01 0.25W 5%	R14,24,31,32,39,42,44,50	EACH	BOP	8.000000
13	024 075	RESISTOR 10K RC01 0.25W 5%	R7,21,22,23,27,28,29,33,34,	EACH	BOP	18.000000
14	024 138	RESISTOR 180R RC01 0.25W 5%	R1	EACH	BOP	1.000000
15	024 126	RESISTOR,15K WCR 0.125W 2%	R45,48	EACH	BOP	2.000000
16	024 147	RESISTOR 22R RC01 0.25W 5%	R2	EACH	BOP	1.000000
17	024 051	RESISTOR 1K RC01 0.25W 5%	R10,18	EACH	BOP	2.000000
18	024 123	RESISTOR 1M RC01 0.25W 5%	R13,19,52	EACH	BOP	3.000000
19	024 139	RESISTOR 20K RC01 0.25W 5%	R6	EACH	BOP	1.000000
20	024 140	RESISTOR 220R RC01 0.25W 5%	R20	EACH	BOP	1.000000
21	024 141	RESISTOR 2K2 RC01 0.25W 5%	R4,8,17,36,38,43	EACH	BOP	6.000000
22	024 142	RESISTOR 330R RC01 0.25W 5%	R30	EACH	BOP	1.000000
24	024 088	RESISTOR 39K RC01 0.25W 5%	R5,9	EACH	BOP	2.000000
25	024 030	RESISTOR 470R RC01 0.25W 5%	R15,16,26	EACH	BOP	3.000000
26	024 090	RESISTOR 47K 0.125W 2% S/M	R11	EACH	BOP	1.000000
27	024 066	RESISTOR 4K7 0.125W 2% S/M	R25,37	EACH	BOP	2.000000
28	024 143	RESISTOR 5K6 RC01 0.25W 5%	R12	EACH	BOP	1.000000
30	024 145	RESISTOR 680R RC01 0.25W 5%	R3	EACH	BOP	1.000000
31	024 146	RESISTOR 0R0 RC01 0.25W 5%	R21,2,3	EACH	BOP	3.000000
35	023 006	MINITURE POT10K LINEAR 10LV TC	RV1	EACH	BOP	1.000000
38	042 001	DIODE S/M SOT 23 BAS16	D1,2,3,5,6	EACH	BOP	5.000000
39	042 005	RECTIFIER DIODE SMT GF1A/GF1D	D7,8	EACH	BOP	2.000000
41	030 027	CAP 47uF 25v ELECT RADIAL	C2,10	EACH	BOP	2.000000
42	030 043	CAP 4u7 35v ELECT RADIAL	C5,15,18,20	EACH	BOP	4.000000
44	050 002	TRANSISTOR BC549C	TR1,2,4,5	EACH	BOP	4.000000
45	050 010	SWITCH SLIDE DPCO 2P 2W	SW1,SW2,SW3	EACH	BOP	3.000000
46	030 129	REGULATOR LM317T Variable 1.5A	IC1	EACH	BOP	1.000000
47	050 130	IC PIC16C73-20/P 28 DIL 0.3"	IC2	EACH	BOP	1.000000
48	031 075	I.C. 74HC4052 SO16	IC3	EACH	BOP	1.000000
49	050 030	IC LMC 660 CN	IC5,7	EACH	BOP	2.000000
50	031 059	IC 93C06 8 pin SO-8 SMT	IC4	EACH	BOP	1.000000
51	031 070	IC 74HC4094 SO16 SMT	IC6	EACH	BOP	1.000000
53	070 122	TERMINAL BLK PCB HEADER 9 WAY	TB1	EACH	BOP	1.000000
54	070 126	TERMINAL BLK 8-WAY PLUG IN	PL1	EACH	BOP	1.000000
55	070 038	HEADER 6 WAY x 2 ROW	PL1	EACH	BOP	1.000000
56	070 045	SOCKET 5 PIN DIN 180 DEGREES	SK1,2	EACH	BOP	2.000000
57	015 003	7 SEG DISPLAY RED 14.2mm 10pin	DSP1	EACH	BOP	1.000000
58	070 010	SOUNDER PIEZO PCB MTD	BP1	EACH	BOP	1.000000
59	076 001	INDUCTOR 22uH SIMID 04 10%	L2,3,4,5	EACH	BOP	4.000000

Parts List

LR 53335-17

Ill. 3 pg. 2 of 2

Product Group : Sub assembly

Part No : 0840 100 Model 840 Sub Assembly Type : Sub-Assembly

Revision No. : C BOM Desc. : Model 840 P.C.B. Assy Issue No. : A Issue Date : 25 Mar 96

Change Note : Drawing No : Expiry Date :

Seq.No.	Component Part	Description	Component Reference	U.O.M.	Type	Number off
60	070 040	CRYSTAL 20.0MHZ HC49/4H	XL1	EACH	BOP	1.000000
61	075 017	CHOKE DOUBLE BALANCED 2 x 27mH	L1	EACH	BOP	1.000000
62	040 008	DIODE BRIDGE RECTIFIER W04	BR1	EACH	BOP	1.000000
63	053 020	FUSEHOLDER	FS1	EACH	BOP	1.000000
64	063 021	FUSE COVER	FS1	EACH	BOP	1.000000
65	063 017	FUSE 20x5 63mA T Med. Time Lag	FS1	EACH	BOP	1.000000
66	050 055	MOSFET P CHANNEL ZVP2106	TR3	EACH	BOP	1.000000
67	062 014	RELAY SPCO 10A Contact 6V Coil	RL1	EACH	BOP	1.000000
68	075 020	TRANSFORMER 12+12V OEP63812/14	TFX1	EACH	BOP	1.000000
69	042 007	DIODE 5V6 400mW SOT-23	D4,D9	EACH	BOP	2.000000
70	073 119	IC Socket 28 PIN 0.3"	IC2	EACH	BOP	1.000000
71	062 015	RELAY BASE - SCHRACK RP78601	RL1	EACH	BOP	1.000000
72	062 016	RELAY CLIP - SCHRACK RP16100	RL1	EACH	BOP	1.000000
73	081 074	Digital Pot X9313WS Xicor SOIC	IC8	EACH	BOP	1.000000

FILOTEX UNITE PAILLART

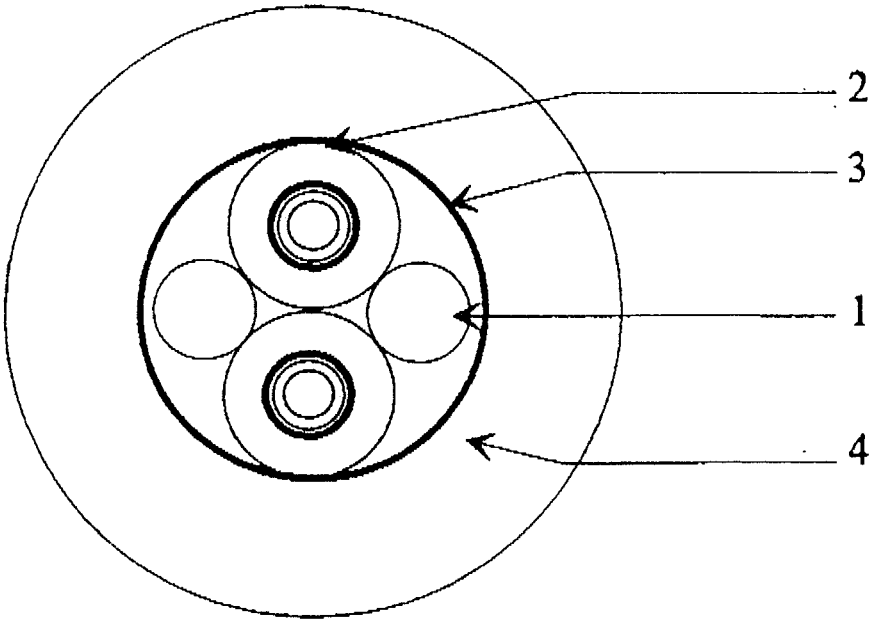

DESCRIPTION :

LR 53335-17.
III. 4

1 : Filler

2 : 2 Cores :
- 2 cores : 19x0.08 mm Tinned Copper (0.1 mm²)
  - ETFE Insulation Ø = 0.80 mm
- 0.10 Tinned Copper Spinning
- PVC jacket (Diameter = 2.00 mm)

3 : Textile Tape

4 : Flexible PVC Jacket Ø = 7.00 +/- 0.25 mm

CHARACTERISTICS:

TS : 30 V
T° : -20 à +65°C
Weight : 50 Kg/km
Colours : insulation : black and white
internal jacket : white (natural colour)
external jacket : Mat Black
Marking : FILOTEX P 2 cores 28 AWG 60 °C E54342 P
Style 2709 30V * AWM MEMCO
* UL sigle

Ref. FILOTEX	Date	Edit.
298324	10/04/96	4

PROJET

MEMCO

FILOTEX ▼ ALCATEL CABLE

Caractéristiques données a titre indicatif

173023-2343061
1089167 Att4 Illustrations Page 18 of 47

DAIDEN CO., LTD.

ELECTRIC WIRES
& CABLES PRODUCTS

DATE. Aug. 22, 2007
SPEC. No. JS07-626

MASTER CONTRACT: 173023
REPORT: 1089167 (LR 53335-17)
PROJECT: 1984996
Illustration 26 Page 1 of 4

SPECIFICATION

FOR

CROSS-LINKED POLYETHYLENE (XLPE) INSULATED
AND PVC JACKETED CABLE WITH SHIELD
(RMCV－SW－B(c2464))

signed by _____
Y. KAWANAMI

Manager
Technical section
Communication cable dept

1. SCOPE

This specification covers the construction and characteristics of the Cross-Linked Polyethylene (XLPE) insulated and PVC jacketed cable with shield.

2. SYMBOL, SIZE

The symbol and size of the cable shall be

" RMCV-SW-B(2464) AWG23/3C "

($0.3mm^2/3C$)

3. UL STANDARD

RECOGNIZED by UNDERWRITERS LABORATORIES Inc.

STYLE No.	2464 (UL 758 : AWM)
Rating TEMP.	80℃
VOLT.	300V
USE	Internal wiring or external interconnection of electronic equipment (such as desk-type calculators, dictating machines, or x-ray equipment) .

4. FLAME TESTING

The cable shall pass the vertical wire flame test (VW-1) described in UL1581, Paragraph 1080.

5. CONSTRUCTION

The construction of the cable shall conform to Table 1.

6. CHARACTERISTICS

The characteristics of the cable shall be shown in Table 2.

7. MARKING

The following information shall be indicated with a suitable method to the cable.

" —DAIDEN K.K. E91337 c𝓤us AWM 80C 300V 2464 VW-1 I/II A/B FT1 -LF- — "

MASTER CONTRACT: 173023
REPORT: 1089167 (LR 53335-17)
PROJECT: 1984996
Illustration 26 Page 2 of 4

* * * * * * * *

Table 1 Construction

ITEM		VALUE
Symbol		RMCV-SW-B(2464)
Size	AWG(mm^2)/Cores	23(0.3)/3C
Conductor	Material	Annealed Copper
	Construction (No. /mm)	60/0.08
	Dia. (approx. mm)	0.72
Insulation	Material	XLPE
	Thickness(approx. mm)	0.25
	Dia. (approx. mm)	1.22
Stranding	Center layer	3 C
Shield (winding)	Material	Tinned Annealed Copper
	Wire diameter(approx. mm)	0.10
Jacket	Material(color)	Flame retardant・Oil resistant PVC (Black)
	Thickness(approx. mm)	2.05
Overall diameter(mm)		7.0 (±0.25)
Approx. mass(kg/km)		65

Table 2 Characteristics (at 20℃)

ITEM	STANDARD VALUE
Max. DC resistance of conductor (Ω/km)	71.8
Min. insulation resistance (MΩ-km)	100
Dielectric strength (V/min)	AC 2000

MASTER CONTRACT: 173023
REPORT: 1089167 (LR 53335-17)
PROJECT: 1984996
Illustration 26 Page 3 of 4

Fig 1

Cross-Section of Cable

[Symbol : RMCV-SW-B(2464)]
[Size : AWG23(0.3mm^2)/3C]

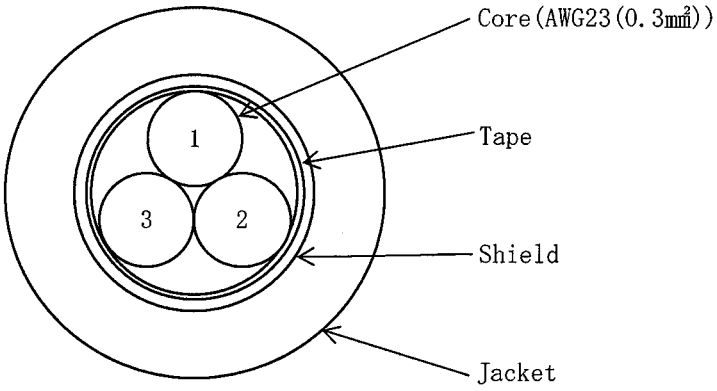

CoreNo.	Colors
1	Blue
2	White
3	Red

MASTER CONTRACT: 173023
REPORT: 1089167 (LR 53335-17)
PROJECT: 1984996
Illustration 26 Page 4 of 4

NOT TO SCALE

FROM: Dave Gaskin

MEMCO LIMITED
MEMCO HOUSE, WALDECK ROAD
MAIDENHEAD, BERKS SL6 8BR, ENGLAND
TELEPHONE: (01628) 540141
FACSIMILE: (01628) 410052

MEMCO

TO: Gabe Lippa – CSA Motors & Controls Group

DATE: 2/10/98

FAX: 00 1 416 747 4178

SUBJECT: LR 53335 – 19 – Alternative transformer

PAGE 1 OF 2

LR 53335-17
111.8
pg. 1 of 2
-19

MESSAGE:

Dear Gabe

Here are the details you requested by email on the transformer

6VA total

INPUT: 240V, 60Hz,
(PRIMARY)

OUTPUT: 18V, 0.167A, 3VA
(EACH SECONDARY) is rated 18Vac, 3VA

VIEW FROM UNDERSIDE

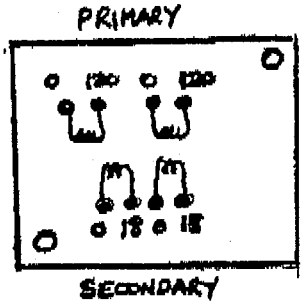

Primary voltages:	0-120V,	0-120V
Secondary Voltages:	0-18V,	0-18V
Regulation	15%	
Insulation	Class 2	Double section bobbin With reinforced insulation.

Primary to Secondary withstand voltage: Greater than 3.2kV RMS

If you need any more information please don't hesitate to contact me

Best Regards

Dave Gaskin

SIGNED:

mpw

Manby Park Westropp
Manby Park
Louth
Lincolnshire
LN11 8UT
Great Britain

Tel: +44 (0) 1507 328031
Fax: +44 (0) 1507 328039

Material Summary Sheet

(Relating to MPW Pt No 953619 for Memco)

LR 53335-17

I 11.8 pg. 2 of 2 appl'n #-19

Bobbin:
Miles Platts
EI48 x 14.8mm DS (Flame Retardent)
Nylon 66 Glass Reinforced
Technyl A20-V25
UL File No: E44716(M)

Wire:
Hi Wire
Alcatel Soudrex
UL File No: E67139

Varnish:
AEV Ltd
Ultimeg 2000/372
Anti Tracking Varnish Clear

Tape:
Barnier
Polyester Tape Thermal Class B (130deg C)
UL File Ref No: E103655(M)

making power work

Manufacturers of

Power Supplies

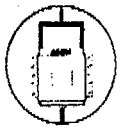

Battery Chargers

Transformers

FAO: DAVE GASKIN - 01628.410052
FROM: Dorian Geary

Transformer Specification 5014/EI42

Product Description:	5VA; 115 + 115v : 18 + 18v 50/60Hz Euro Transformer; PCB Mounting.
Bobbin:	Double Section, class UL94V0 moulded bobbin, with integral moulded dividing wall, in Technyl A20V25, UL File E44716 (M)
Windings:	All winding wires to BSEN60317-4 (BS6811 Pt3 sect 3.1) Polyurethane round copper wire Grade 1; class 130
Primary(s):	0 – 115v: 0 - 115v 50/60Hz Two concentrically wound primaries, separated by 3 layers Polyester tape, UL File E103656 (M), 0.055mm thk/layer; wound in one section of bobbin
Secondary(s):	0 - 18v @ 0.166A; 0 - 18v @ 0.166A Two concentrically wound secondaries, in other bobbin section
Core.	14.8mm Stack of Laminations to DIN 41302
Terminations:	All windings terminated to bobbin mounted pc solder pins; Phosphor Bronze plated to BS2011: 1981
Impregnation/ Encapsulation:	Completed coil and core assembly fitted in UL94V2 Nylon 66 box and encapsulated in UL94V0 resin under vacuum
Insulation:	Electrical strength and insulation resistance tested in accordance with BSEN60742 (BS 3535 Pt 1 clause 17)
Standards complied with:	Designed and manufactured to meet the safety requirements of BSEN60742 and BSEN60950 EEC Directive LVD 73/23/EEC – CE Marking affixed
Electrical Tests:	a. No Load Magnetisation Current b. Turns Ratio nom +/- 3% c. *Induced Voltage Test @ x5 Rated Input @ x12 Rated Frequency* d. 5Kv Primary(s) to Secondary(s) Electrical Strength Test e. Examination, Fit & Function, Performance and Safety Checks carried out at 100% level.

REPORT: 173023
ILL.14
PROJECT: 1033472

Master: F\Shared\Specs
Prepared By: D.Griffiths

Version: 2.0
Rev: 09-12-99

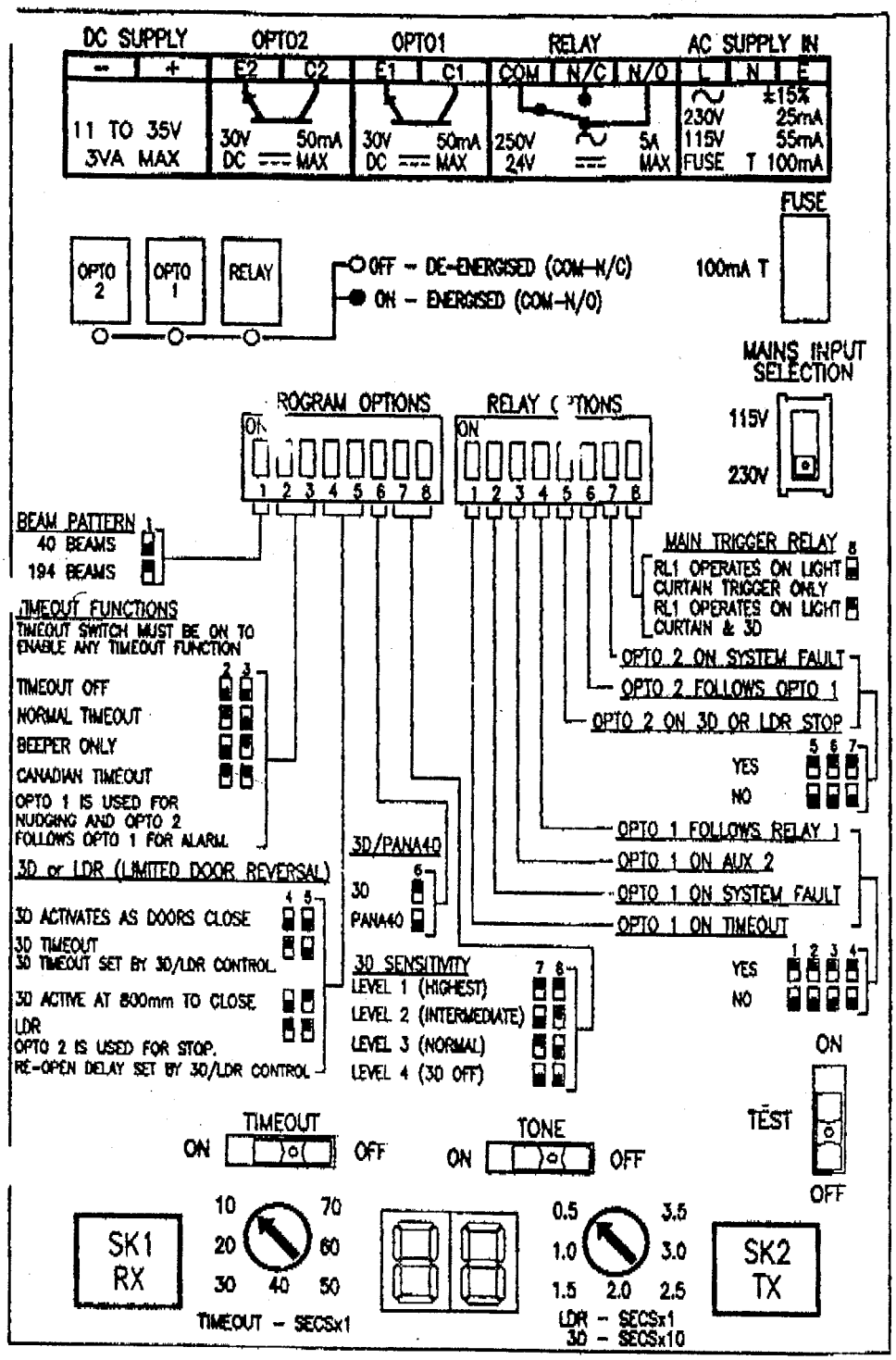

LR 53335-17

111.9

pg. 1 of 3

appl'n -19

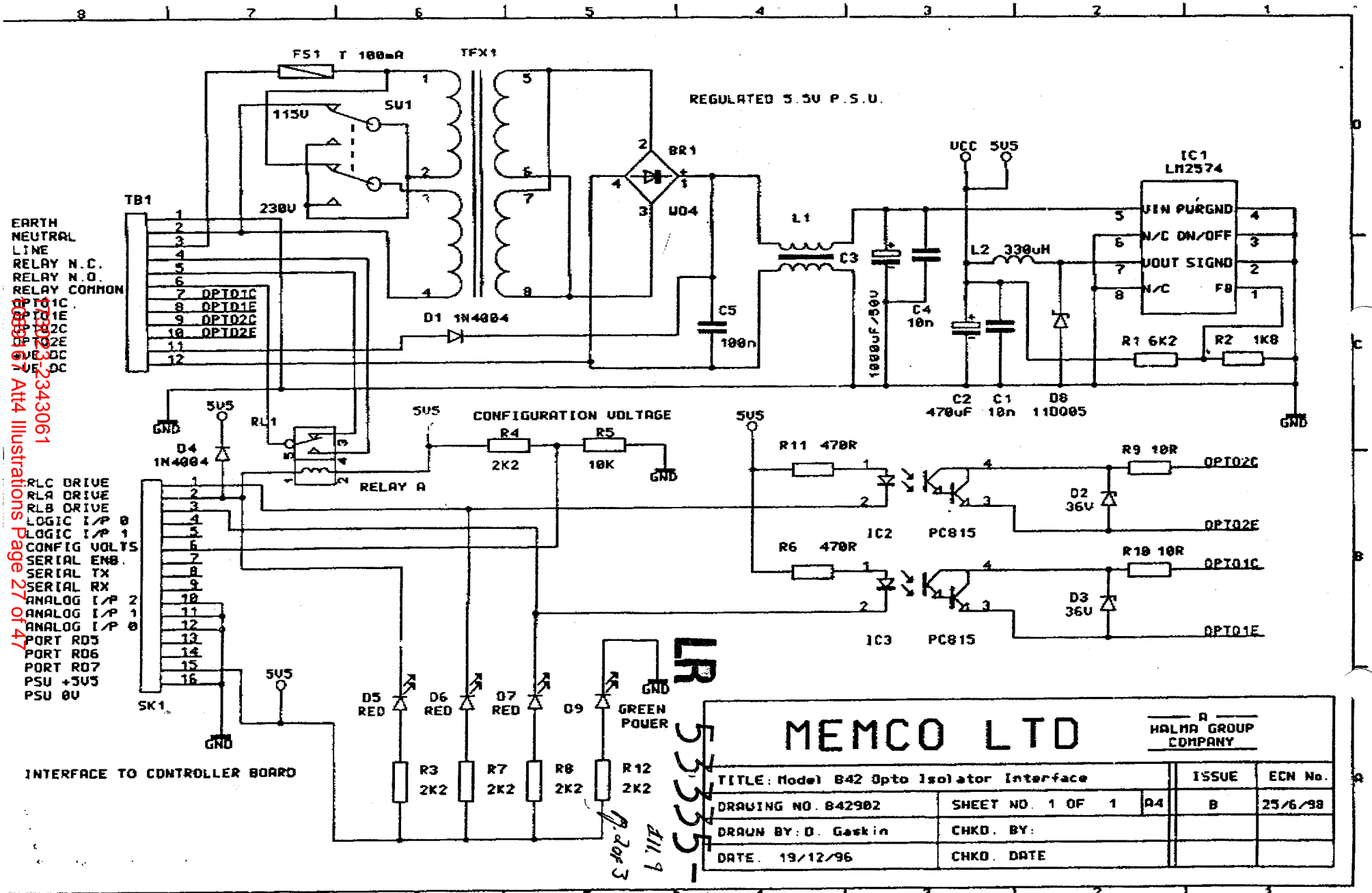

LR 533351-17
Att 4 Page 3
Jan 19

0800 67 2343061
Att4 Illustrations Page 27 of 47

MMBRS

Parts List (with BOM Component Ref.)

Product Group : ALL "PLUS" PRODUCTS

Part No. : D842 107 P40+ Opto Isolator I/F Type : Sub-Assembly

Revision No. : F BOM Desc. : Model 842 Standard I/F smps Issue No. : Issue Date : 23 Apr 98
Change Note : Panaforty Plus Drawing No. : 842 107 Expiry Date :

Seq.No.	Component Part	Description Extended Text/Ref.	Component Reference	U.O.M.	Type	Number off
1	842 222/B	Model 842 Opto I/F P.C.B.		EACH	[illegible]	1.000000
3	035 067	CAP 100nF 50V+/-10% X7R	C5	EACH	BOP	1.000000
4	035 065	CAP 10nF 100v+/-10% AXIAL	C1,4	EACH	BOP	2.000000
5	020 034	RESISTOR 1K8 .25W 5%	R2	EACH	BOP	1.000000
6	020 086	RESISTOR 6K2 .25W 2% METAL	R1	EACH	BOP	1.000000
7	020 035	RESISTOR 2K2 .25W 5%	R3,R4,R7,R8,R12	EACH	BOP	5.000000
8	020 043	RESISTOR 10K .25W 5%	R5	EACH	BOP	1.000000
9	020 024	RESISTOR 270R .25W 5%	R6,R11	EACH	BOP	2.000000
10	030 072	CAP 1000uF/35V ELECT AL	C3	EACH	BOP	1.000000
11	040 009	DIODE 1N4005S	D1,4	EACH	BOP	2.000000
12	040 008	DIODE BRIDGE RECTIFIER W04	BR1	EACH	BOP	1.000000
13	080 131	LM2574N-ADJ S.M.P.S. regulator	IC1	EACH	BOP	1.000000
14	030 010	CAP 470uF 16v ELECT RADIAL	C2	EACH	BOP	1.000000
15	062 015	RELAY BASE FOR 062 014	RL1	EACH	BOP	1.000000
16	062 019	Relay Clip IMO-M2RP (842 Only)	RL1	EACH	BOP	1.000000
17	062 014	RELAY SPCO 10A Contact 6V Coil	RL1	EACH	BOP	1.000000
18	063 001	FUSE 20x5 100ma GMC CSA	FS1	EACH	BOP	1.000000
19	080 052	OPTO ISOLATOR PC815 35V/80mA	IC2,3	EACH	BOP	2.000000
20	020 007	RESISTOR 10R .25W 5%	R9,10	EACH	BOP	2.000000
21	073 147	TERMINAL BLOCK 12 WAY	TB1	EACH	BOP	1.000000
22	060 016	SWITCH VOLTAGE SELECTOR	SW1	EACH	BOP	1.000000
23	075 010	TRANSFORMER M1818E	TFX1	EACH	BOP	1.000000
24	073 132	SOCKET 16 way	SK1	EACH	BOP	1.000000
25	075 017	CHOKE DOUBLE BALANCED 2 x 27mH	L1	EACH	BOP	1.000000
26	041 010	LED 3 DIA.RED HIGH EFFICIENCY	D5,D6,D7	EACH	BOP	3.000000
27	041 012	LED 3 DIA.GRN HIGH EFFICIENCY	D9	EACH	BOP	1.000000
28	040 014	Schottky Diode 50V 1.1A	D8	EACH	BOP	1.000000
29	063 020	FUSEHOLDER	USE WITH FS1	EACH	BOP	1.000000
30	063 021	FUSE COVER	USE WITH FS1	EACH	BOP	1.000000
31	075 008	Inductor 330uH/0.43A Radial	L2	EACH	BOP	1.000000
32	040 036	DIODE ZENER BZX85C39 39V 1.3W	D2,3	EACH	BOP	2.000000

LR 53335-17

111.9 appl'n -19

pg. 3 of 3

OXFORD ELECTRICAL PRODUCTS LTD
14-17 Industrial Estate, Wroslyn Road, Freeland,
Witney, Oxfordshire, OX8 8HZ
Telephone: +44 (0)1993 883214 Fax: +44 (0)1993 882500
e-mail: info@oep.co.uk

PROTOTYPE INFORMATION SHEET

Customer:	Memco Ltd.		
F.A.O:	Kevin Taylor		
Tel No.		Fax No.	
Cust Ref:	12V dual output mains transformer		
Design No:	PDS 1091	Date:	12/10/99

Primary Details	Termination Pin/Colour			1	2		4	5			
	Voltage/ Phasing			0	115V		0	115V			
Secondary Details	Termination Pin/Colour			10	9	8	7				
	Voltage/ Phasing			0	12V	0	12V				

Schematic Diagram/Other Remarks

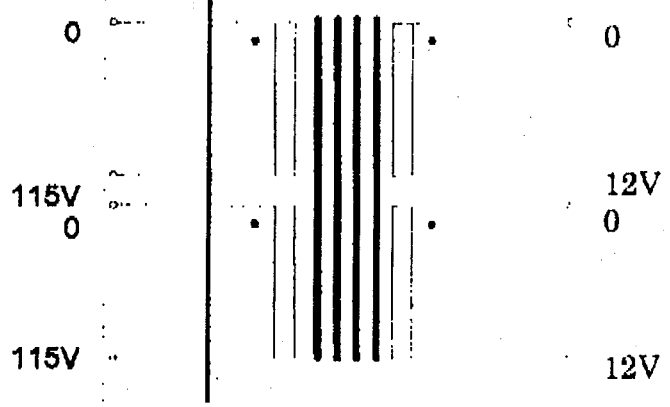

REPORT: 173023
ILL.16
PROJECT: 1033472

Specification:
Input:
115V + 115V @ 50/60Hz
Magnetising current: 30mA @ 230V

Off load outputs:
15.60V + 15.60V ± 0.2V

Full Load outputs:
12.0V + 12.0V ± 0.2V

Regulation:
23.0%
Flash Test:
Primaries to Secondaries
3.75kV for 1 minute

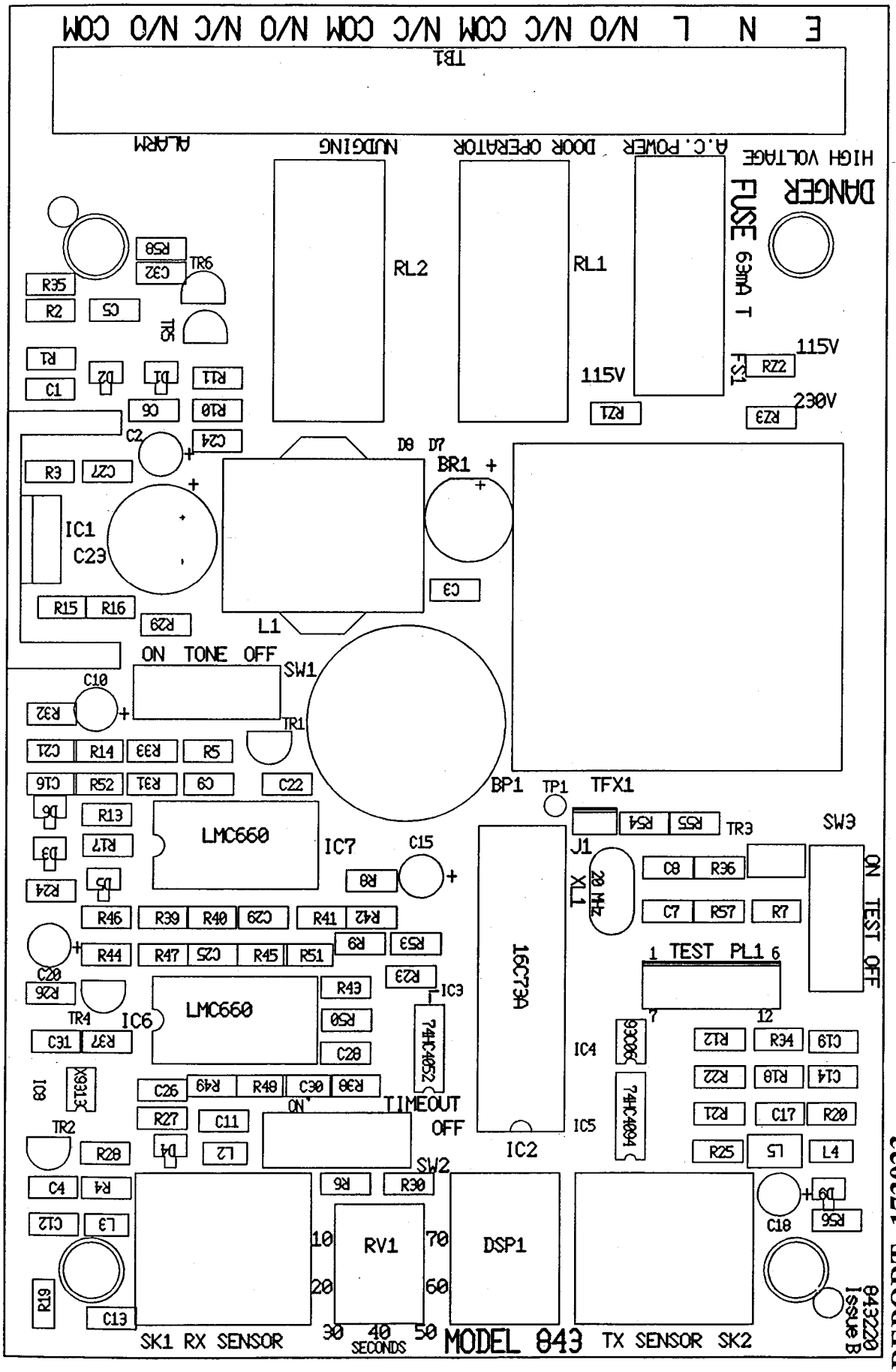

REPORT: 173023
ILL.19
PROJECT: 1089167

TECHNICAL SPECIFICATION

技 术 规 格 书

DESCRIPTION （产品名称）： **POWER TRANSFORMER**

MODEL （产品型号）： **DC402-FP**

CUSTOMER （客户名称）：

CUSTOMER PART NO. （客户代码）：

DATE （确认日期）：

DRAWER (设计)	CHECKED(审核)	APPROVED(批准)	DATE(日期)	NO. REV (编号含版本号)	PAGE (页号)
			2009.05.14	2009YMT001REV0	1/4

	天津市琛冈高技术有限公司				
DESCRIPTION 产品名称	MODEL 产品型号	PROVISIONAL DEVELOPING CODE 开发代码	CUSTOMER 客户名称	CUSTOMER PART NO. 客户代码	DATE 确认日期
电源变压器		DC402-FP			

◆**MACHANICAL DRAWING (装配图)**

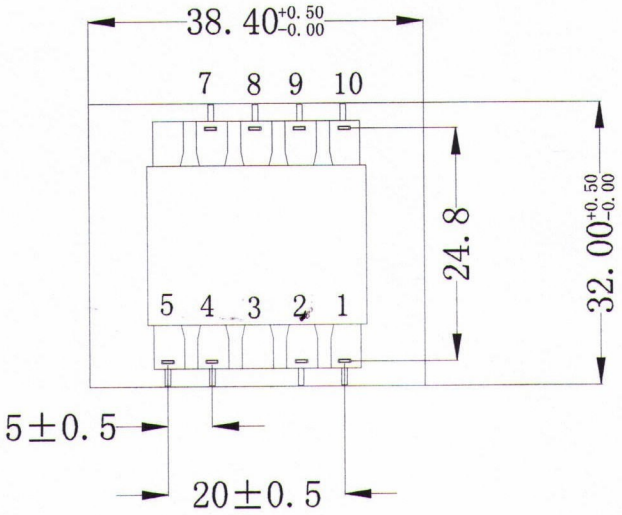

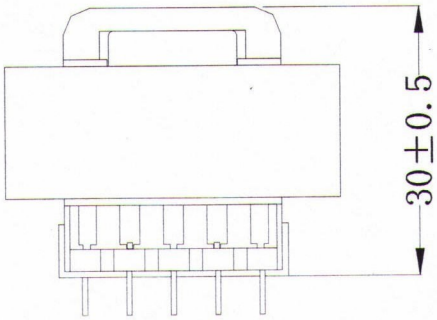

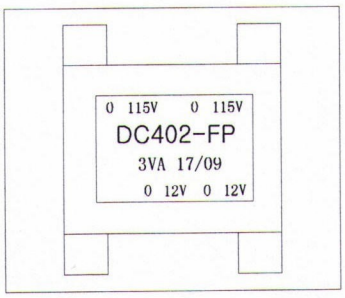

DRAWER (设计)	CHECKED(审核)	APPROVED(批准)	DATE (日期)	NO. REV (编号含版本号)	PAGE (页号)
			2009.05.14	2009YMT001REV0	2/4

DESCRIPTION 产品名称	MODEL 产品型号	PROVISIONAL DEVELOPING CODE 开发代码	CUSTOMER 客户名称	CUSTOMER PART NO. 客户代码	DATE 确认日期
电源变压器		DC402-FP			

◆ **ELECTRICAL CHARACTERISTIC AND DRAWING(电性能及电原理图)**

1. CONNECTION

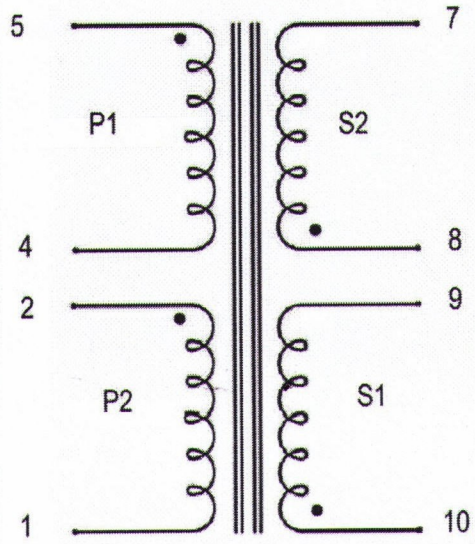

2. ELECTRICAL PERFORMANCE

2.1 FUNCTIONAL TEST

	Current I Or power P	Voltage V volt	Attributes controlled
S1	125.0mA	AC 12.0V	V1=load secondary voltage with supply 230V(connect 1-5,SHORT2-4) 50Hz (9-10)
S2	125.0mA	AC 12.0V	V1 =load secondary voltage with supply 230V (connect 1-5,SHORT2-4) 50Hz (7-8)

2.2 DIELECTRIC STRENGHT

	Voltage V	Frequency Hz	Current mA	Time sec	Attributes controlled
P-S	3600	50	10	2	Dielectric strength between Primary and secondary winding

天津市琛冈高技术有限公司

DESCRIPTION 产品名称	MODEL 产品型号	PROVISIONAL DEVELOPING CODE 开发代码	CUSTOMER 客户名称	CUSTOMER PART NO. 客户代码	DATE 确认日期
电源变压器		DC402-FP			

◆ **LIST OF MATERIAL （材料列表）**

NO.	NAME	SPECIFICATION	SUPPLIER	SGS UL CERTI.NO
1	LAMINATED CORES	EI38/0.5T	YUNG-CHIN SILICON STUL CO.,LTD	
2	BOBBIN	EI38×13.0 PA66	CHENGUANG RESEARCH INSTITUTE OF CHEMICAL IND CHINA NATL BLUE STAR CO	E231281
3	Insulation tape	polyester tape 0.025T Yellow	Jingjiang Pressure Sensitive Glue Factory	E165111(N)
4	COPPER WIRE	GRADE1 CLASS 155℃	SHANGHAI ASIA PACIFIC ELECTRIC CO.,LTD.	E214423
			ELEKTRISOLA HANGZHOU CO.,LTD.	E143312
5	Varnish	HD3006	DONG GUAN WEI HAO SCIENTECH ELECTRONICS MATERIAL CO.,LTD	

DRAWER (设计)	CHECKED(审核)	APPROVED(批准)	DATE (日期)	NO. REV (编号含版本号)	PAGE(页号)
			2009.05.14	2009YMT001REV0	4/4

華興變壓器制造廠有限公司
WAH HING TRANSFORMER MFY. LTD.
香港九龙官塘兴业街 15-17 号中美中心 A 座 12-13 楼
12&13/F, Blk. A, Chung Mei Centre, 15-17 Hing Yip St., Kwun Tong, Kowloon, Hong Kong
Tel: 852-2341 2297 Fax: 852-2341 5941 E-mail: mkt@wahhing.com.hk

SPECIFICATION FOR APPROVAL

Customer: Delta Impact Ltd.	
Customer P/N:	**Customer Rev.:**
Customer Model No.:	**Customer ID:** D062
Wah Hing Model No.: T08770A	**Wah Hing Rev.:** 03
Article: AC POWER TRANSFORMER	
Standard: EN60065/UL60065 (Meet)	**Safety No.:**
Catalog No.:	**Date:** 2009-04-28

Remarks:

Please note items listed in page.2 that requires your consent for deviation.

Eng. Dept. 曹强彦	Eng. Dept. 蒲祖玲	Eng. Dept. 李建华
Designed/Maker	**Checked by**	**Approved by**

Please evaluate the samples, sign this approval sheet and return to WAH HING

☐ Approved
☐ Rejected
☐ Conditional Approved

Comments:

_____

_____

_____

Customer Approved by : _____

Signature & Date

173023-2343061
1089167 Att4 Illustrations Page 35 of 47

Deviation and History

Please note items listed below does not meet your specifications and requires your consent for deviation:

Item	Customer specification	Suggestion specification

Remarks:

8				
7				
6				
5				
4				
3	03	P3 changed	Cao	2009-04-28
2	02	P3 changed	Cao	2007-12-20
1	01	P1, P3, P4, P6, P7, P8 changed	Li	2007-10-25
--	00	Initial Issue	Li	2007-10-03
Item	Rev	Description	Sign	Date

History

Customer P/N:	Wah Hing Model No.: T08770A

Dimensions and Diagram

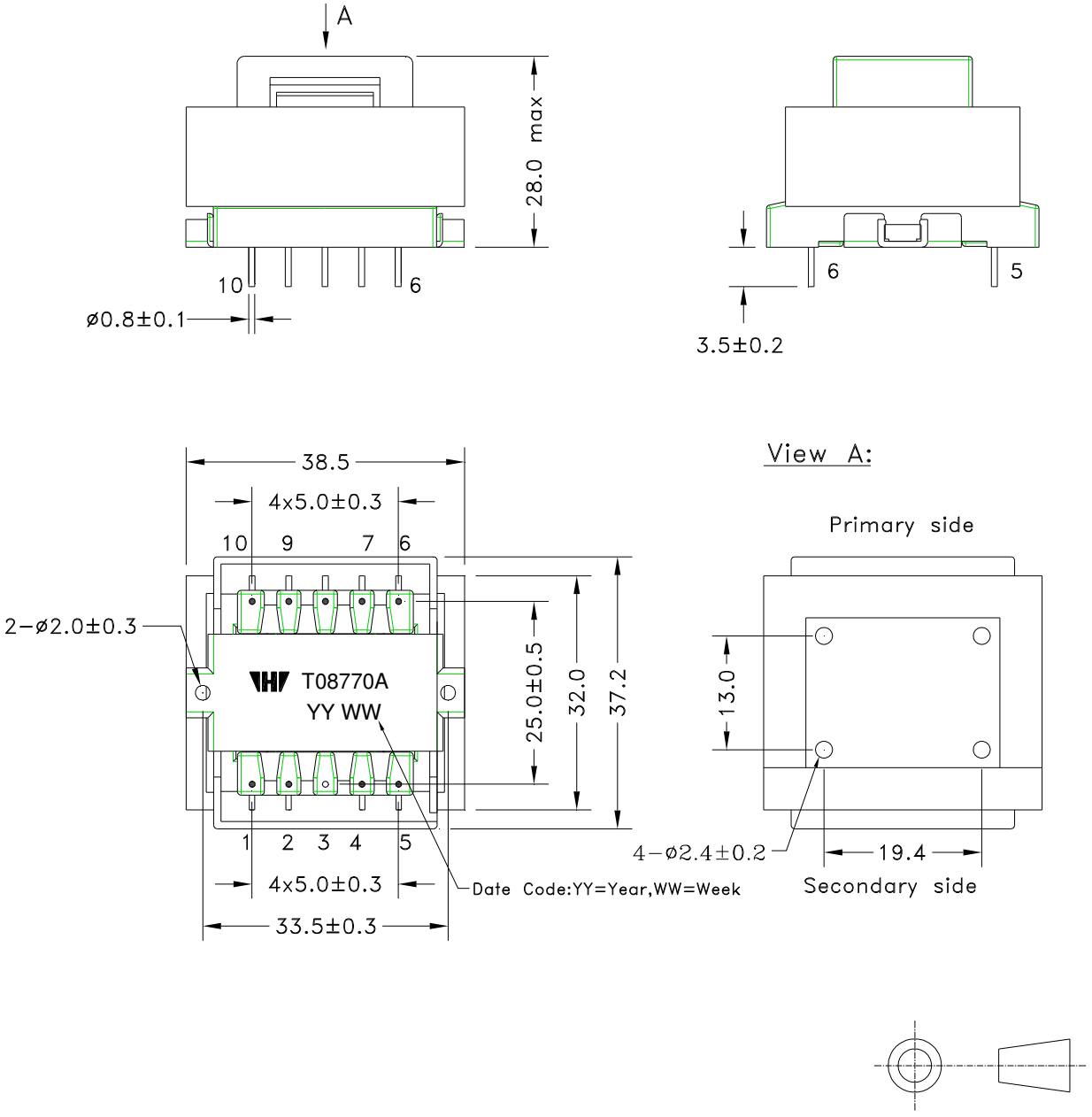

Notes:

1. Unit: mm
2. The marking will be printed on cover or
   Pasted on cover of transformer by label for future production.
3. Pins exist at position: 1, 2, 4, 5, 6, 7, 8, 9, 10.
4. The other tolerance is follows: ±1.0mm

Customer P/N:	Wah Hing Model No.: T08770A

Electrical Characteristics

Circuit diagram:

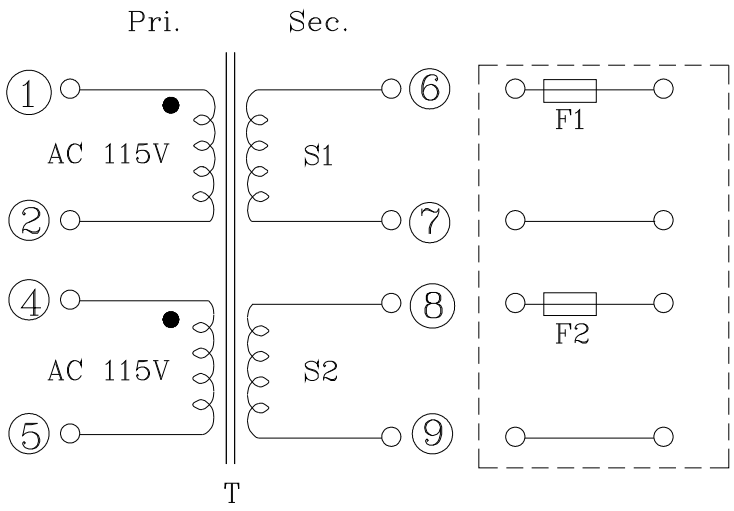

T ---- Transformer
F1-F2 ---- Additional External Protection Device, F1=F2=160mA
Remark: The transformer need additional external protection device in it's secondary circuit when used by User, including testing in Lab. (Pls. Refer to circuit diagram for detail)

Tabel-1: Secondary loaded voltage:

Primary input			S1 (6-7) with 160mA C.F	S2 (8-9) with 160mA C.F	S3	S4	S5
115/230Vac 60/50Hz	Rated load	Load	125mA ac	125mA ac			
		Standard	12.0Vac	12.0Vac			
115/230Vac 60/50Hz	1	No Load	0mA ac	0mA ac			
		Standard	15.0Vac	15.0Vac			
115/230Vac 60/50Hz	2	Load					
		Standard					
115/230Vac 60/50Hz	3	Load					
		Standard					
	4	Load					
		Standard					

Tabel-1 notes:

1. If not specified, the secondary voltage tolerance is ±5%.

Customer P/N:	Wah Hing Model No.: T08770A

Electrical Characteristics

Standard atmospheric conditions:

Unless otherwise specified, the standard range of atmospheric conditions for marking measurements and tests are as follows:

Ambient temperature : 15℃ to 35℃
Relative humidity : 25% to 85%

If there is doubt about the results, measurement shall be made within the following limits:

Ambient temperature : 20℃± 1℃
Relative humidity : 63% to 67%

Operating temperature range:

-10℃ to +40℃

1	Output voltage and current	☑ Measured in a.c. circuit ☐ D.C. circuit including rectifying circuit	Refer to Page 4
2	Rated primary voltage	☐ 50Hz ☐ 60HZ ☑ Both 50Hz and 60Hz	115/230V
3	No load current	Input 115/230Vac, 60/50Hz	28mA or less
4	Stand-by consumption	Input 115/230Vac, 60/50Hz	---- W or less
5	Secondary voltage		Refer to Page 4
6	Insulation resistance	Apply a voltage of 500V d.c. for 1min.: Between the primary and core Between the primary and secondary	100MΩ or more
7	Dielectric strength	Between primary and secondary: 3.0KVac for 1min. 2mA Between primary and core: 3.0KVac for 1min. 2mA	No damage such as Breakdown, etc.
8	Layer dielectric strength	Apply (A) V, 400Hz for 18s to the primary terminal of (B) V. (A) 230/460V (B) 115/230V	No damage such as Breakdown, etc.
9	Primary direct Current resistance	Between terminals of 1 and 4	----Ω ±15%
10	Secondary direct Current resistance	Between terminals of 5 and 8	----Ω ±15%
11	Temperature rise	The voltage of (A) V shall be applied to the primary terminal of (B) V. Measurement shall be made after constant temperature are reached. (A) 230/460V, (B) 115/230V Secondary load conditions: ☐ All at the rated current ☑ The input voltage is increased by 10% after the rated current is set. ☐ The rated current is set, with the input voltage 10% high. ☑ Other: Ta=25℃	Windings up to: 75 K. (by the resistance method) Iron core up to: --- K. (by the thermometer method)

Customer P/N:	Wah Hing Model No.: T08770A

Electrical Characteristics

12	Damp heat	The power transformer shall be stored at an ambient temperature of 40℃±2℃ with relative humidity of 90% to 95% for 48h.Then condensation shall be removed. After which measurement shall be made within 10 min.	Insulation resistance	5MΩ or more
			Dielectric strength	Clause 7 shall be satisfied. Trip current 5mA
13	Dry heat	The power transformer shall be stored at an ambient temperature of 100℃±3℃ for 6h. After which measurement shall be made within 10 min.	Insulation resistance	5MΩ or more
			Dielectric strength	Clause 7 shall be satisfied. Trip current 5mA
14	Abnormal temperature test	☐ 15-day test ☐ Short-circuit and overload test with		Windings up to: ----K Max.
15	Beat noise (Hum)			25 dB or less
16	Thermo-protector	Primary windings built in / ℃ thermal fuse.		
17	Mass			----g (reference)

CONSTRUCTION DIAGRAM AND MATERIAL LIST

1. Internal construction

(1) Lead wire and winding shall be connected by twisting together.

(2) Thickness and materials of insulation and also creepage, clearance and thickness of insulation, shall conform to applicable safety standard.

2. Humidity resistance treatment of windings varnish impregnation

3. Tensile strength of terminals (pins)

A load of 20 N shall be applied in the axial direction. When it is retained for 60 seconds, there shall be no loosening or breakdown.

For one not exceeding 2 Kg, the static load same with the self weight shall be applied.

4. For transformers with varnish impregnation treatment, varnish stuck on the bottom or in holes shall not interfere when assembling the product.

5. Appearance

There shall be no scratches, dents, or distinct blemishes on the body, pin.

6. Fitting strength

There shall be no damage such as deformation when a static load of 20 N is applied in all directions for 60 s.

Customer P/N:	Wah Hing Model No.: T08770A

Construction Diagram

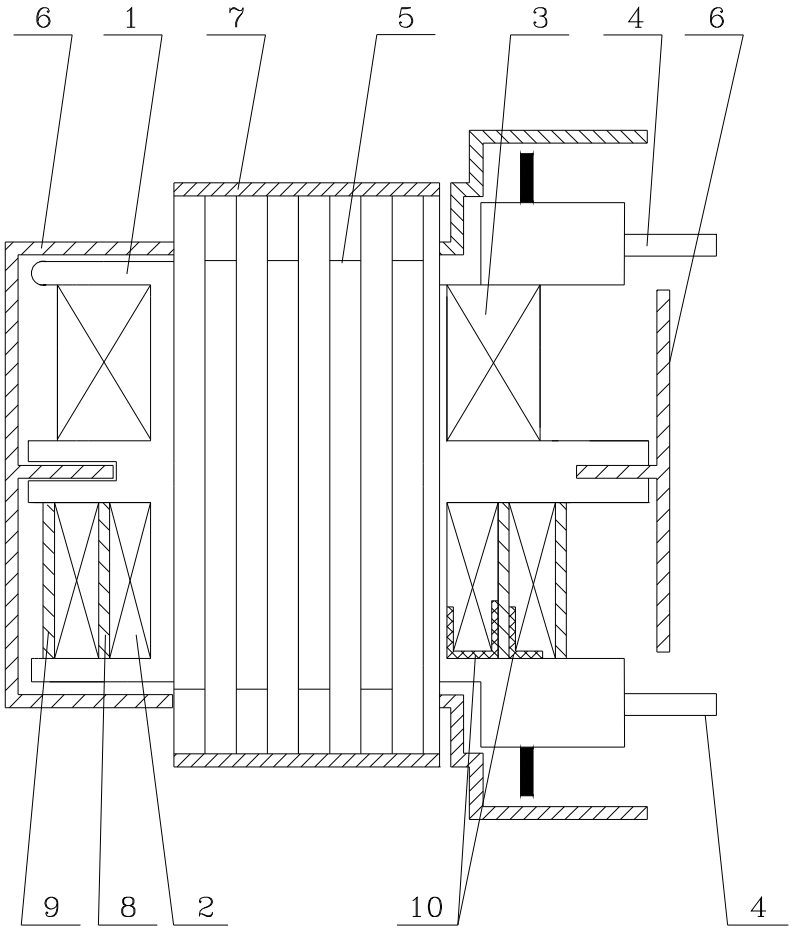

1. BOBBIN
2. PRIMARY WINDINGS
3. SECONDARY WINDING
4. INSERTING PINS
5. LAMINATION CORE
6. BOBBIN CABINET & COVER
7 CORE OUTRE WRAP
8. BETWEEN PRIMARY WINDINGS INSULATION
9. PRIMARY OUTER WRAP
10. PRIMARY COIL INSULATION

Customer P/N:	Wah Hing Model No.: T08770A

Materials List

No.	Description	Material, Thickness/Turns	Manufacture	Safety No.
1	Bobbin	PET, FR530, UL94V-0	E.I. Dupont	E41938
2	Primary Winding	Polyurethane enameled copper wire MW28C or MW75C	Ta win	E152187
			Pacific-thai	E142108
3	Secondary Winding	Polyurethane enameled copper wire MW28C or MW75C	Ta win	E152187
			Pacific-thai	E142108
4	Inserting pins	Copper alloy	WELL FORE	None
5	Lamination Core	Silicon steel sheet, thickness 0.50mm	Nippon steel	None
6	Bobbin cabinet & cover	Nylon 66, 101F or 101L	E.I. Dupont	E41938
7	Core outer wrap	Polyester tape, 0.05mm.t.,	SYMBIO	E50292
8	Between primary Windings insulation	Polyester tape, 0.05mm.t.,	SYMBIO	E50292
9	Primary outer wrap	Polyester tape, 0.05mm.t.,	SYMBIO	E50292
10	Primary coil insulation	Polyester tape, 0.05mm.t.,	SYMBIO	E50292

1. All materials meet ROHS requirement.
2. Please advise if customer have any special requirements.

Otherwise, all materials may be substituted by other equivalent manufacturer.

Customer P/N:	Wah Hing Model No.: T08770A

MYRRA SAS
2 Boulevard de la Haye 77600 Bussy saint Georges

SPECIFICATION PRODUIT

P/N	26110
Performs :	Safety Isolating transformer (EN61558-2-6)
Power	3VA
Primary Voltage	2x115V 50/60Hz ± 0.5Hz
Secondary voltage	2x12V ± 5% (EN61558-1 §11)
No load Primary current	20mA max @ 230V
No load secondary voltage	1.30 x Secondary Voltage ± 2.0%
Primary resistance	550 & 645 Ω ± 9%
Secondary resistance	13.9 & 15.9 Ω ± 5%
Pin Out	Primary (1-2) & (4-5) Secondary (7-8) & (9-10)

Material :

Bobbin	PA66, A3X2G5, UL94V0 (UL E41871)
Cover	PA66, A3X2G5, UL94V0 (UL E41871)
Varnish	BC359 Class H (UL E317427)
Magnet wires	Grade 1, email PU modifié, IEC317-MW79, classe F (155°C)

Températures :

Storage	-35 – 95°C (16 hours) et -25°C – 85°C
Extrême	Températures limites (Short term) -35°C / +155°C

Life Time :

To CNET-RDF93	114 µFits

Tracking :

Production date	Stamp on Core (ww-yy)
Production Site	Poland (Kaluszyn)
Evolution (identification)	Conforme EN61558-1, EN61558-2-6, EN60950 ; changement uniquement lié aux exigences de la norme et aux exigences MEMCO

Process instructions :
Standard Through Holes PCB insertion

DES	N/A
MSL	Non spécifié

Packaging
To be defined

Marking :

Data sheet

Article no.	2665	**Version**	standard grid 25mm
Product	Bobbin	**Tool no.**	Wz 6895/2 ST
Type	EI 38/13,5/2 ST COMPLETE	**Catalog page**	78

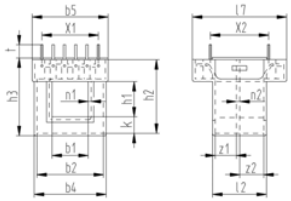

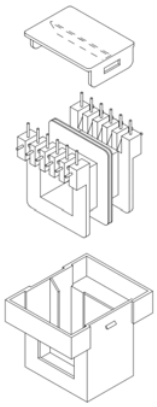

z1	z2	b1	b2	b4	b5	k	h1	h2	h3	l2	l7	n1	n2	t	X1	X2	X3
+-0,2	+-0,2	+-0,2	+-0,2	+-0,2	+-0,3	+-0,2	+-0,2	+-0,2	+-0,3	+-0,2	+-0,3	+0,2	+-0,1	+-0,4	+-0,3	+-0,3	
6	8,5	13,2	24,1	25,4	27	5,5	13,6	25,6	27	19,1	38	0,6	2	4,2	4x5	25	2x5

Materials PA 6.6 - Durethan AKV 30H, nc - Class B (130°C) - UL 94-HB
BASF Ultramid A3X2G5 replacement of FUN-NAT (Technyl A20) Miles platts material

Assembly Pinned with 2x5 wires 0,8 mm
Standard: fully pinned, partial pinning upon request

Notes X3 = max. number of slots or terminals
Standard grid X2, special grid in ( ), please state "X2 = ..." and indicate the respective Art-No. when ordering.

Weisser Spulenkörper
GmbH & Co. KG

Heidenheimer Straße 26
73450 Neresheim

Fon +49 73 26 82 0
Fax +49 73 26 82 280

weisser@weisser.de
www.weisser.de

info

Data sheet

Article no.	2461	**Version**	with shortened cover
Product	Bobbin	**Tool no.**	Wz 7067/2 ST
Type	EI 38/13,6/2 ST COMPLETE	**Catalog page**	79

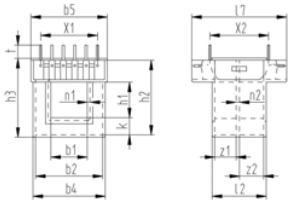

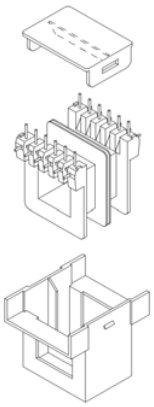

z1	z2	b1	b2	b4	b5	k	h1	h2	h3	l2	l7	n1	n2	t	X1	X2	X3
+-0,2	+-0,2	+-0,2	+-0,2	+-0,2	+-0,3	+-0,2	+-0,2	+-0,2	+-0,3	+-0,2	+-0,3	+0,2	+-0,1	+-0,4	+-0,3	+-0,3	
6	8,4	13,2	24,1	25,4	27	5,5	13,6	25,6	27	19,1	37	0,7	2	5,2	4x5	27,5	2x5

Materials PA 6.6 - Durethan AKV 30H, nc - Class B (130°C) - UL 94-HB
BASF Ultramid A3X2G5 replacement of FUN-NAT (Technyl A20) Miles platts material

Assembly Pinned with 2x5 wires 0,8 mm
Standard: fully pinned, partial pinning upon request

Notes X3 = max. number of slots or terminals

Weisser Spulenkörper
GmbH & Co. KG

Heidenheimer Straße 26
73450 Neresheim

Fon +49 73 26 82 0
Fax +49 73 26 82 280

weisser@weisser.de
www.weisser.de

info

Need more information? Click Here to go to the iQ™ for Plastics database

Component - Plastics E36632

BASF CORP

1609 BIDDLE AVE, WYANDOTTE MI 48192

A3X2G5

Polyamide 66 (PA66), "Ultramid", furnished as pellets

Color	Min Thk (mm)	Flame Class	HWI	HAI	RTI Elec	RTI Imp	RTI Str
NC, BK	0.40	-	4	0	110	115	-
	0.81	V-0	0	0	120	115	130
GY	1.5	V-0	0	0	120	115	130
	3.0	V-0	0	0	120	115	130
NC	3.0	5VA	0	0	120	115	130

Comparative Tracking Index (CTI): 0

Dimensional Stability (%): 0

High-Voltage Arc Tracking Rate (HVTR): 1

High Volt, Low Current Arc Resis (D495): 6

Dielectric Strength (kV/mm): 19

Volume Resistivity (10^x ohm-cm): 11

ANSI/UL 94 small-scale test data does not pertain to building materials, furnishings and related contents. ANSI/UL 94 small-scale test data is intended solely for determining the flammability of plastic materials used in the components and parts of end-product devices and appliances, where the acceptability of the combination is determined by UL.

Report Date: 1992-08-17

Last Revised: 2006-02-14

Underwriters Laboratories Inc®

IEC and ISO Test Methods

Test Name	Test Method	Units	Thickness Tested (mm)	Value
Flammability	IEC 60695-11-10, IEC 60695-11-20	Class (color)	0.81	V-0 (NC, BK)
			1.5	V-0 (GY)
			3.0	V-0 (GY)
			3.0	5VA (NC)
Glow-Wire Flammability (GWFI)	IEC 60695-2-12	C	-	-
Glow-Wire Ignition (GWIT)	IEC 60695-2-13	C	-	-
IEC Comparative Tracking Index	IEC 60112	Volts (Max)	-	-
IEC Ball Pressure	IEC 60695-10-2	C	-	-
ISO Heat Deflection (1.80 MPa)	ISO 75-2	C	-	-
ISO Tensile Strength	ISO 527-2	MPa	-	-
ISO Flexural Strength	ISO 178	MPa	-	-
ISO Tensile Impact	ISO 8256	kJ/m^2	-	-
ISO Izod Impact	ISO 180	kJ/m^2	-	-
ISO Charpy Impact	ISO 179-2	kJ/m^2	-	-

Underwriters Laboratories Inc®

The materials covered in this database are incomplete in certain constructional features or restricted in performance capabilities and are intended for use as components of complete equipment submitted for investigation rather than for direct separate installation in the field. THE FINAL ACCEPTANCE OF THE COMPONENT IS DEPENDENT UPON ITS INSTALLATION AND USE IN COMPLETE PRODUCTS SUBMITTED TO UNDERWRITERS LABORATORIES INC.